Date: 5-13-04

DEB & Cheryl

Vacuum Chamber Clearances

	Sector	Girder 1	Girder 2	Girder 3	Girder 4	Girder 5
F	1	X	X	X	X	X
	2	✓	✓	✓	✓	✓
	3	✓	✓	✓	✓	✓
A	4	✓	✓	✓	✓	✓
	5	✓	✓	✓	✓	✓
	6	✓	✓	✓	✓	✓
	7	✓	✓	✓	✓	✓
	8	✓	✓	✓	✓	✓
	9	✓	✓	✓	✓	✓
	10	✓	✓	✓	✓	✓
	11	✓	✓	✓	✓	✓
	12	✓	✓	✓	✓	✓
B	13	✓	✓	✓	✓	✓
	14	✓	✓	✓	✓	✓
	15	✓	✓	✓	✓	✓
	16	✓	✓	✓	✓	✓
	17	✓	✓	✓	✓	✓
	18	X	X	X	X	X
	19	X	X	X	X	X
C	20	X	X	X	X S20B:S2	X
	21	X	X	X	X	X
	22	X	X	X	X	X
	23	X	X	X	X	X
	24	X	X	X	X	X
	25	X	X	X	X	X
D	26	X	X	X	S26B:S2	X
	27	X	X	X	X	X
	28	X	X	X	X	X
	29	X	X	X	X	X
	30	X	X	X	X	X
	31	X	X	X	X	X
E	32	X	X	X	X	X
	33	X	X	X	X	X
	34	X	X	X	X	X
	35	X	X	X	X	X
	36	X	X	X	X	X
	37	X	X	X	X	X
F	38	X	X	X	X	X
	39	X	X	X	X	X
	40	X	X	X	X	X

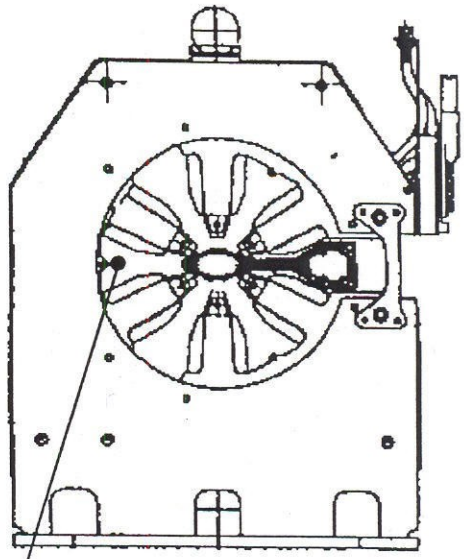

G-2 AS2-AS3

G-4 BS3-BS2

Go-Nogo Here- Downstream end

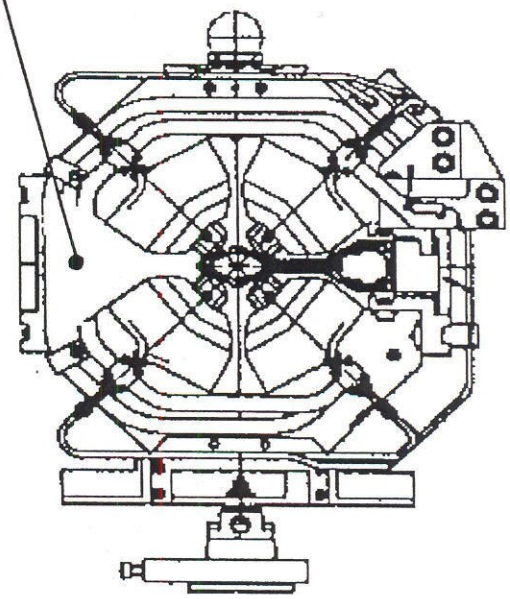

G-1 AQ1-AQ3

G-3 AQ4-BQ4

G-5 BQ3-BQ1

Date: 1-16-04 DEB

1-19-04

Vacuum Chamber Clearances

	Sector	Girder 1	Girder 2	Girder 3	Girder 4	Girder 5
F	1	✓	✓	✓	✓	✓
1-20-04	2	✓	✓	✓	✓	✓
	3	✓	✓	✓	✓	✓
	4	✓	✓	✓	✓	✓
A	5	✓	✓	✓	✓	✓
	6	✓	✓	✓	✓	✓
	7	✓	✓	✓	✓	✓
	8	✓	✓	✓	✓	✓
	9	✓	✓	✓	✓	✓
-20-04	10	✓	✓	✓	✓	✓
	11	✓	✓	✓	✓	✓
	12	✓	✓	✓	✓	✓
B	13	✓	✓	✓	✓	✓
	14	✓	✓	✓	✓	✓
	15	✓	✓	✓	✓	✓
	16	✓	✓	✓	✓	✓
	17	✓	✓	✓	✓	✓
-16-04	18	✓	✓	✓	✓	✓
	19	✓	✓	✓	✓	✓
	20	✓	✓	✓	S20B:S2	✓
	21	✓	✓	✓	✓	✓
C	22	✓	✓	✓	✓	✓
	23	✓	✓	✓	✓	✓
1-20-04	24	✓	✓	✓	✓	✓
	25	✓	✓	✓	✓	✓
	26	✓	✓	✓	S26BS2	✓
D	27	✓	✓	✓	✓	✓
	28	✓	✓	✓	✓	✓
	29	✓	✓	✓	✓	✓
1-20-04	30	✓	✓	✓	✓	✓
	31	✓	✓	✓	✓	✓
E	32	✓	✓	✓	✓	✓
	33	✓	✓	✓	✓	✓
	34	✓	✓	✓	✓	✓
	35	✓	✓	✓	✓	✓
1-19-04	36	✓	✓	✓	✓	✓
F	37	✓	✓	✓	✓	✓
	38	✓	✓	✓	✓	✓
	39	✓	✓	✓	✓	✓
	40	✓	✓	✓	✓	✓

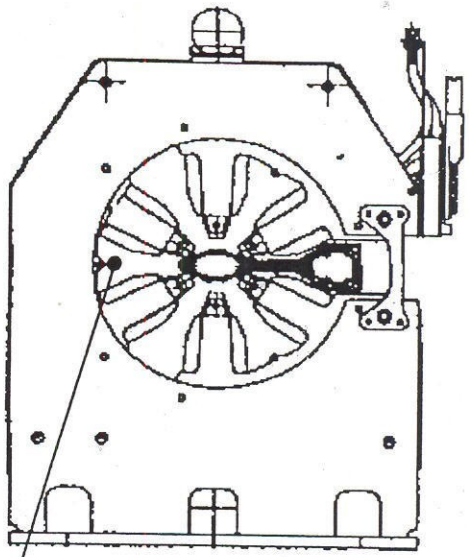

G-2 AS2-AS3 G-4 BS3-BS2

Go-Nogo Here- Downstream end

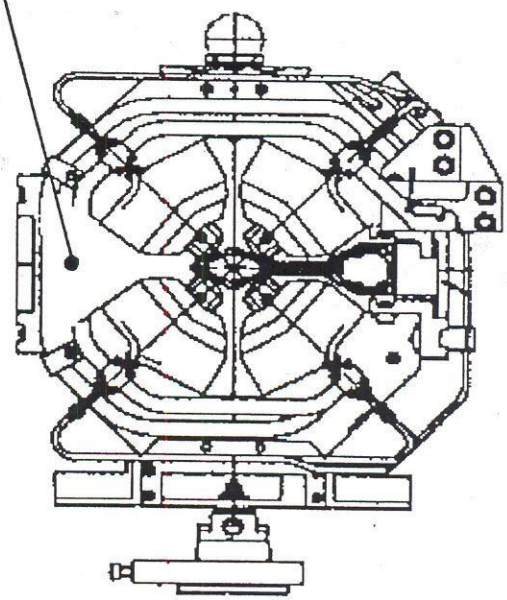

G-1 AQ1-AQ3 G-3 AQ4-BQ4 G-5 BQ3-BQ1

DEB

Date: 9/17/03

Vacuum Chamber Clearances

	Sector	Girder 1	Girder 2	Girder 3	Girder 4	Girder 5
F	1					
	2					
	3					
A	4					
	5					
	6					
	7					
	8					
	9					
	10					
	11					
B	12					S12iB:S2
	13					
	14					
	15					
	16					
	17					
	18					
	19					
C	20				S20iB:S2	
	21					
	22					
	23					
	24					
D	25					
	26					
	27					
	28					
	29					
	30					
E	31					
	32					
	33					
	34					
	35					
	36					
	37					
	8					
	9					
	1					

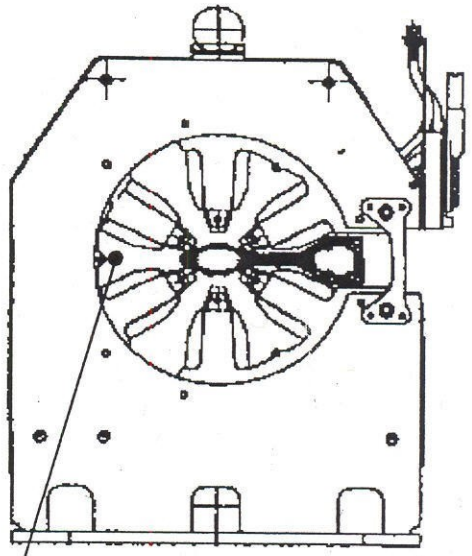

G-2 AS2-AS3

G-4 BS3-BS2

Go-Nogo Here- Downstream end

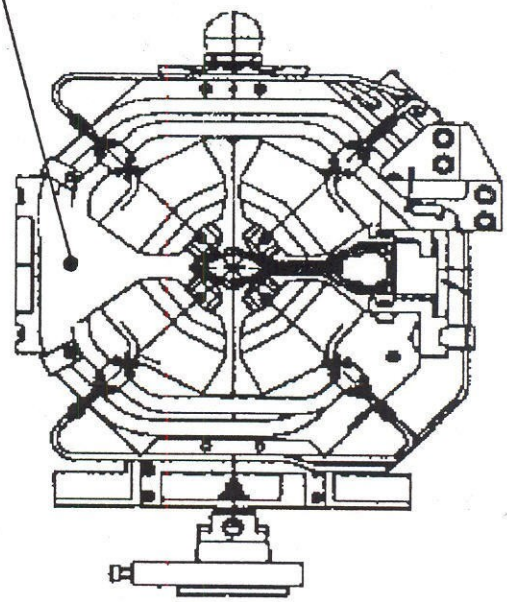

G-1 AQ1-AQ3

G-3 AQ4-BQ4

G-5 BQ3-BQ1

28ND E 31G32

Date: 5/13/03

Deb & Cheryl

Vacuum Chamber Clearances

	Sector	Girder 1	Girder 2	Girder 3	Girder 4	Girder 5
5-16-03 F	1	✓	✓	✓	✓	✓
5-19	2	✓	✓	✓	✓	✓
	3	✓	✓	✓	✓	✓
	4	✓	✓	✓	✓	✓
A	5	✓	✓	✓	✓	✓
	6	✓	✓	✓	✓	✓
	7	✓	✓	✓	✓	✓
	8	✓	✓	✓	✓	✓
	9	✓	✓	✓	✓	✓
5-16-03	10	✓	✓	✓	✓	✓
	11	✓	✓	✓	✓	~~S12B:S2~~
	12	✓	✓	✓	✓	S12B:S2
B	13	✓	✓	✓	✓	✓
	14	✓	✓	✓	✓	✓
	15	✓	✓	✓	✓	✓
	16	✓	✓	✓	✓	✓
	17	✓	✓	✓	✓	✓
5/13/03	18	✓	✓	✓	✓	✓
	19	✓	✓	✓	✓	✓
C	20	✓	✓	✓	S20:B:S2	✓
	21	✓	✓	✓	✓	✓
	22	✓	✓	✓	✓	✓
	23	✓	✓	✓	✓	✓
5-19	24	✓	✓	✓	✓	✓
	25	✓	✓	✓	✓	✓
D	26	✓	✓	✓	✓	✓
	27	✓	✓	✓	✓	✓
	28	✓	✓	✓	✓	✓
	29	✓	✓	✓	✓	✓
-19	30	✓	✓	✓	✓	✓
	31	✓	✓	✓	✓	✓
E	32	✓	✓	✓	✓	✓
	33	✓	✓	✓	✓	✓
	34	✓	✓	✓	✓	✓
	35	✓	✓	✓	✓	✓
-03	36	✓	✓	✓	✓	✓
	37	✓	✓	✓	✓	✓
	38	✓	✓	✓	✓	✓
	39	✓	✓	✓	✓	✓
	40	✓	✓	✓	✓	✓

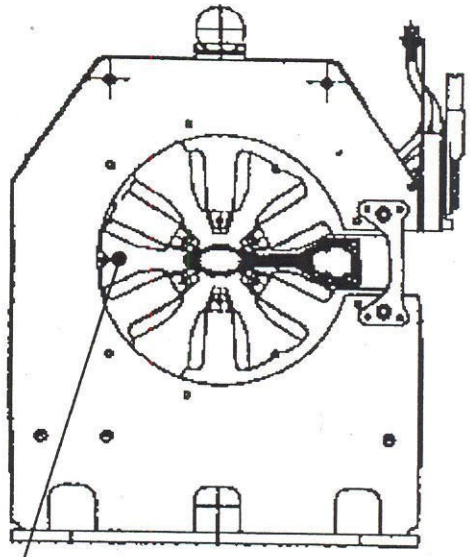

G-2 AS2-AS3 G-4 BS3-BS2

Go-Nogo Here- Downstream end

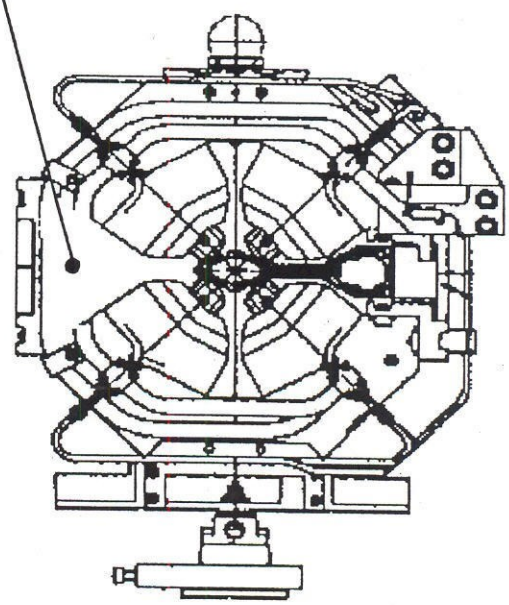

G-1 AQ1-AQ3 G-3 AQ4-BQ4 G-5 BQ3-BQ1

Date: 1/16/03
DEB
&
Cheryl

Vacuum Chamber Clearances

	Sector	Girder 1	Girder 2	Girder 3	Girder 4	Girder 5
1-16-03 F	1	✓	✓	✓	✓	✓
1-17-03 A	2	✓	✓	✓	✓	✓
	3	✓	✓	✓	✓	✓
	4	✓	✓	✓	✓	✓
	5	✓	✓	✓	✓	✓
	6	✓	✓	✓	✓	✓
	7	✓	✓	✓	✓	✓
	8	✓	✓	✓	✓	✓
	9	✓	✓	✓	✓	✓
-20-03 B	10	✓	✓	✓	✓	✓
	11	✓	✓	✓	✓	✓
	12	✓	✓	✓	✓	✓
	13	✓	✓	✓	✓	✓
	14	✓	✓	✓	✓	✓
	15	✓	✓	✓	✓	✓
	16	✓	✓	✓	✓	✓
	17	✓	✓	✓	✓	✓
-20-03 C	18	✓	✓	✓	✓	✓
	19	✓	✓	✓	✓	✓
	20	✓	✓	✓	✓	✓
	21	✓	✓	✓	✓	✓
	22	✓	✓	✓	✓	✓
	23	✓	✓	✓	✓	✓
-20-03 D	24	✓	✓	✓	✓	✓
	25	✓	✓	✓	✓	✓
	26	✓	✓	✓	✓	✓
	27	✓	✓	✓	✓	✓
	28	✓	✓	✓	✓	✓
	29	✓	✓	✓	✓	✓
-20-03 E	30	✓	✓	✓	✓	✓
	31	✓	✓	✓	✓	✓
	32	✓	✓	✓	✓	✓
	33	✓	✓	✓	✓	✓
	34	✓	✓	✓	✓	✓
	35	✓	✓	✓	✓	✓
	36	✓	✓	✓	✓	✓
	37	✓	✓	✓	✓	✓
	38	✓	✓	✓	✓	✓
	39	✓	✓	✓	✓	✓
	40	✓	✓	✓	✓	✓

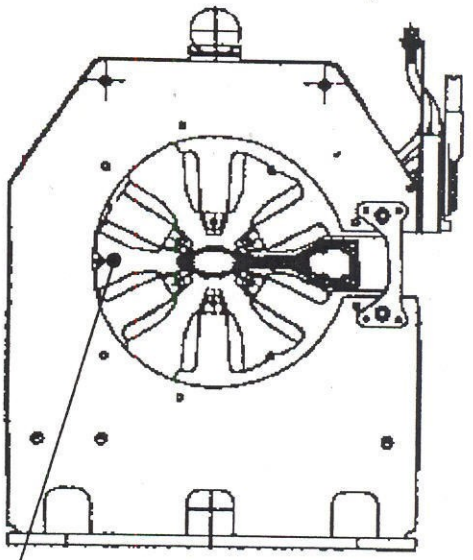

G-2 AS2-AS3 G-4 BS3-BS2

Go-Nogo Here- Downstream end

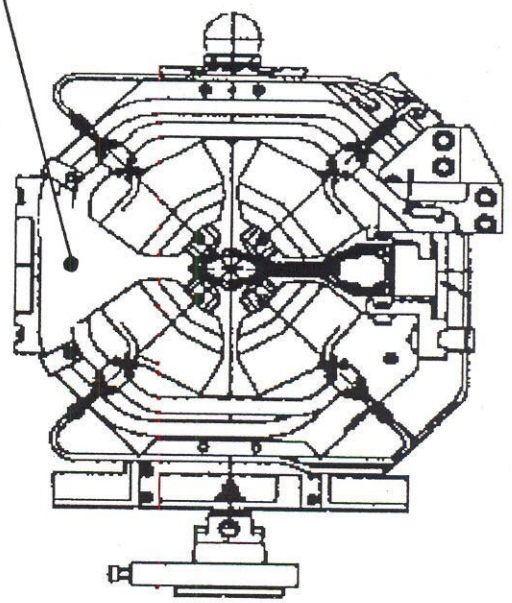

G-1 AQ1-AQ3 G-3 AQ4-BQ4 G-5 BQ3-BQ1

Date: Sept. 2002

Bob Furst

Vacuum Chamber Clearances

	Sector	Girder 1	Girder 2	Girder 3	Girder 4	Girder 5
F	1	✓	✓	✓	✓	✓
	2	✓	✓	✓	✓	✓
Zone	3	✓	✓	✓	✓	✓
	4	✓	✓	✓	✓	✓
A	5	✓	✓	✓	✓	✓
	6	✓	✓	✓	✓	✓
	7	✓	✓	✓	✓	✓
	8	✓	✓	✓	✓	✓
	9	✓	✓	✓	✓	✓
	10	✓	✓	✓	✓	✓
Zone	11	✓	✓	✓	✓	✓
	12	✓	✓	✓	✓	✓
B	13	✓	✓	✓	✓	✓
	14	✓	✓	✓	✓	✓
	15	✓	✓	✓	✓	✓
	16	✓	✓	✓	✓	✓
	17	✓	✓	✓	✓	✓
	18	✓	✓	✓	✓	✓
Zone	19	✓	✓	✓	✓	✓
	20	✓	✓	✓	S2 Tight	✓
C	21	✓	✓	✓	✓	✓
	22	✓	✓	✓	✓	✓
	23	✓	✓	✓	✓	✓
	24	✓	✓	✓	✓	✓
Zone	25	✓	✓	✓	✓	✓
	26	✓	✓	✓	✓	✓
D	27	✓	✓	✓	✓	✓
	28	✓	✓	✓	✓	✓
	29	✓	✓	✓	✓	✓
	30	✓	✓	✓	✓	✓
Zone	31	✓	✓	✓	✓	✓
	32	✓	✓	✓	✓	✓
E	33	✓	✓	✓	✓	✓
	34	✓	✓	✓	✓	✓
	35	✓	✓	✓	✓	✓
	36	✓	✓	✓	✓	✓
Zone	37	✓	✓	✓	✓	✓
	38	✓	✓	✓	✓	✓
F	39	✓	✓	✓	✓	✓
	40	✓	✓	✓	✓	✓

9/27/02

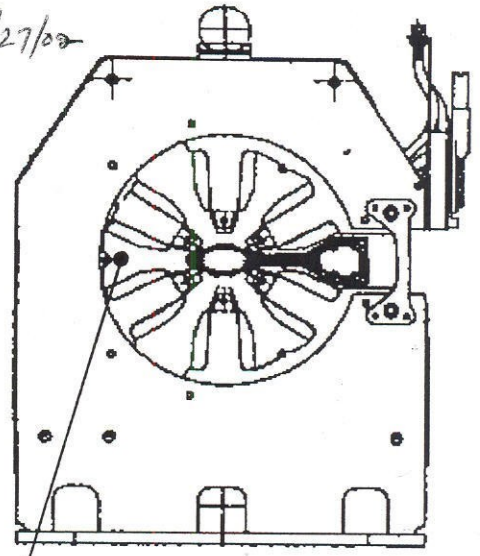

G-2 AS2-AS3

G-4 BS3-BS2

Go-Nogo Here- Downstream end

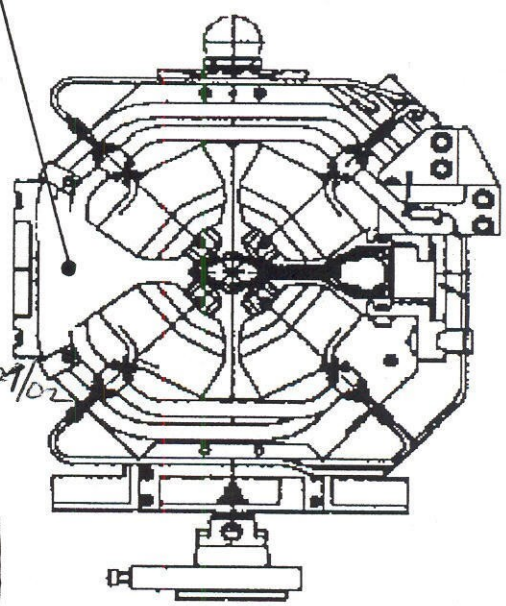

9/27/02

G-1 AQ1-AQ3

G-3 AQ4-BQ4

G-5 BQ3-BQ1

Date: 1-14-2002
DEB

Vacuum Chamber Clearances

	Sector	Girder 1	Girder 2	Girder 3	Girder 4	Girder 5
F	1	✓	✓	✓	✓	✓
	2	✓	✓	✓	✓	✓
	3	✓	✓	✓	✓	✓
A	4	✓	✓	✓	✓	✓
	5	✓	✓	✓	✓	✓
	6	✓	✓	✓	✓	✓
	7	✓	✓	✓	✓	✓
	8	✓	✓	✓	✓	✓
	9	✓	✓	✓	✓	✓
	10	✓	✓	✓	✓	✓
	11 1/14/02	✓	✓	✓	✓	✓
	12	✓	✓	✓	✓	✓
B	13	✓	✓	✓	✓	✓
	14	✓	✓	✓	✓	✓
	15	✓	✓	✓	✓	✓
	16	✓	✓	✓	✓	✓
	17	✓	✓	✓	✓	✓
	18	✓	✓	✓	✓	✓
	19 1/15/02	✓	✓	✓	✓	✓
C	20	✓	✓	✓	✓	✓
	21	✓	✓	✓	✓	✓
	22	✓	✓	✓	✓	✓
	23	✓	✓	✓	✓	✓
	24	✓	✓	✓	✓	✓
	25 1/15/02	✓	✓	✓	✓	✓
	26	✓	✓	✓	✓	✓
D	27	✓	✓	✓	✓	✓
	28	✓	✓	✓	✓	✓
	29	✓	✓	✓	✓	✓
	30	✓	✓	✓	✓	✓
	31	✓	✓	✓	✓	✓
	32 1/15/02	✓	✓	✓	✓	✓
E	33	✓	✓	✓	✓	✓
	34	✓	✓	✓	✓	✓
	35	✓	✓	✓	✓	✓
	36	✓	✓	✓	✓	✓
	37	✓	✓	✓	✓	✓
F	38	✓	✓	✓	✓	✓
	39	✓	✓	✓	✓	✓
	40	✓	✓	✓	✓	✓

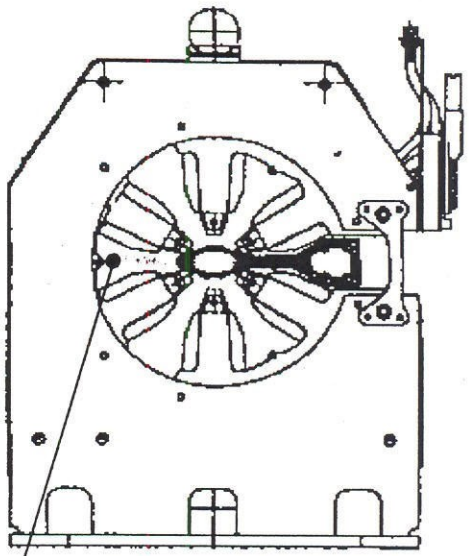

G-2 AS2-AS3 G-4 BS3-BS2

Go-Nogo Here- Downstream end

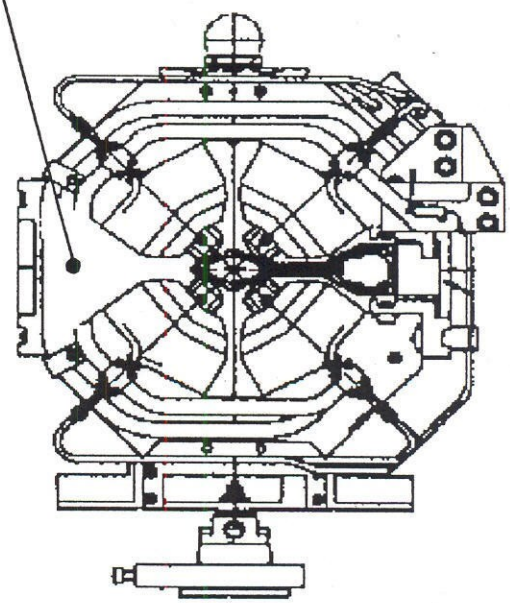

G-1 AQ1-AQ3 G-3 AQ4-BQ4 G-5 BQ3-BQ1

Date: 5-17-02

BOB F. & DEB

Vacuum Chamber Clearances

	Sector	Girder 1	Girder 2	Girder 3	Girder 4	Girder 5	
F	1	✓	✓	✓	✓	✓	5-17
	2	✓	✓	✓	✓	✓	5-20
	3	✓	✓	✓	✓	✓	5-21
	4	✓	✓	✓	✓	✓	
A	5	✓	✓	✓	✓	✓	
	6	✓	✓	✓	✓	✓	
	7	✓	✓	✓	✓	✓	
	8	✓	✓	✓	✓	✓	
	9	✓	✓	✓	✓	✓	
	10	✓	✓	✓	✓	✓	
	11	✓	✓	✓	✓	✓	
B	12	✓	✓	✓	✓	✓	
	13	✓	✓	✓	✓	✓	
	14	✓	✓	✓	✓	✓	
	15	✓	✓	✓	✓	✓	
	16	✓	✓	✓	✓	✓	
	17	✓	✓	✓	✓	✓	
	18	✓	✓	✓	✓	✓	
C	19	✓	✓	✓	✓	✓	
	20	✓	✓	✓	tite ✓	✓	
	21	✓	✓	✓	✓	✓	
	22	✓	✓	✓	✓	✓	
	23	✓	✓	✓	✓	✓	
	24	✓	✓	✓	✓	✓	
	25	✓	✓	✓	✓	✓	
	26	✓	✓	✓	✓	✓	
	27	✓	✓	✓	✓	✓	
D	28	✓	✓	✓	✓	✓	
	29	✓	✓	✓	✓	✓	
	30	✓	✓	✓	✓	✓	
	31	✓	✓	✓	✓	✓	
E	32	✓	✓	✓	✓	✓	
	33	✓	✓	✓	✓	✓	
	34	✓	✓	✓	✓	✓	
	35	✓	✓	✓	✓	✓	
	36	✓	✓	✓	✓	✓	5-17
F	37	✓	✓	✓	✓	✓	5-17
	38	✓	✓	✓	✓	✓	5-17
	39	✓	✓	✓		✓	5-17
	40	✓	✓	✓	✓	✓	5-17

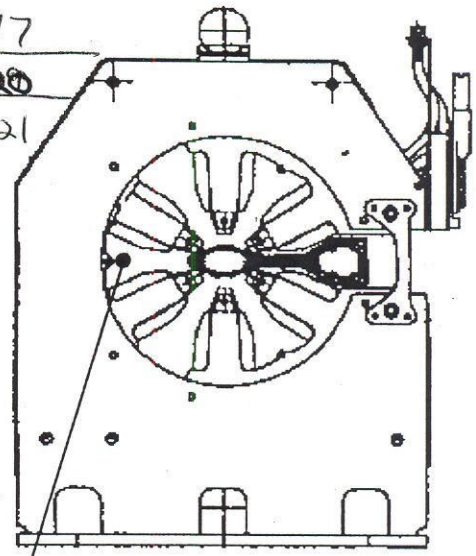

G-2 AS2-AS3 G-4 BS3-BS2

Go-Nogo Here- Downstream end

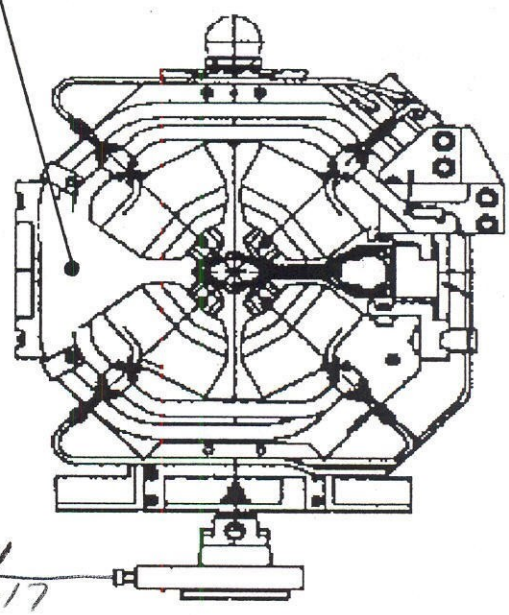

G-1 AQ1-AQ3 G-3 AQ4-BQ4 G-5 BQ3-BQ1

Date: 10-22-01
10-23-01
DEB

Vacuum Chamber Clearances

Sector	Girder 1	Girder 2	Girder 3	Girder 4	Girder 5
1	AQ1 ✓	✓	✓	✓	✓
2	✓	✓	✓	✓	✓
3	✓	✓	✓	✓	✓
4	✓	✓	✓	✓	✓
5	✓	✓	✓	✓	✓
6	✓	✓	✓	✓	✓
7	✓	✓	✓	✓	✓
8	✓	✓	✓	✓	✓
9	✓	✓	✓	✓	✓
10	✓	✓	✓	✓	✓
11	✓	✓	✓	✓	✓
12	✓	✓	✓	✓	✓
13	✓	✓	✓	✓	✓
14	✓	✓	✓	✓	✓
15	✓	✓	✓	✓	✓
16	✓	✓	✓	✓	✓
17	✓	✓	✓	✓	✓
18	✓	✓	✓	✓	✓
19	✓	✓	✓	✓	✓
20	✓	✓	✓	✓	✓
21	✓	✓	✓	✓	✓
22	✓	✓	✓	✓	✓
23	✓	✓	✓	✓	✓
24	✓	✓	✓	✓	✓
25	✓	✓	✓	✓	✓
26	✓	✓	✓	✓	✓
27	✓	✓	✓	✓	✓
28	✓	✓	✓	✓	✓
29	✓	✓	✓	✓	✓
30	✓	✓	✓	✓	✓
31	✓	✓	✓	✓	✓
32	✓	✓	✓	✓	✓
33	✓	✓	✓	✓	✓
34	✓	✓	✓	✓	✓
35	✓	✓	✓	✓	✓
36	✓	✓	✓	✓	✓
37	✓	✓	✓	✓	✓
38	✓	✓	✓	✓	✓
39	✓	✓	✓	✓	✓
40	✓	✓	✓	✓	✓

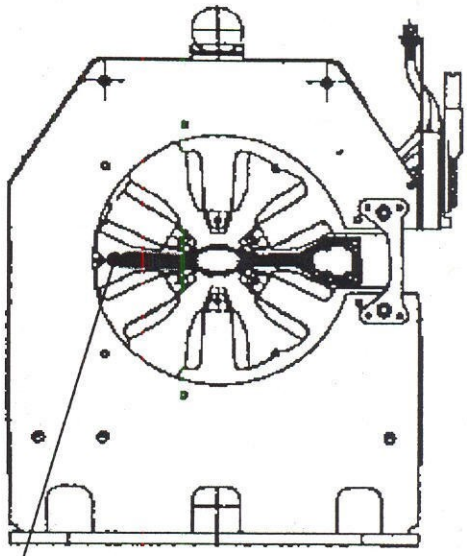

G-2 AS2-AS3 G-4 BS3-BS2

Go-Nogo Here- Downstream end

Where to put metal panels. Long ways. (—)

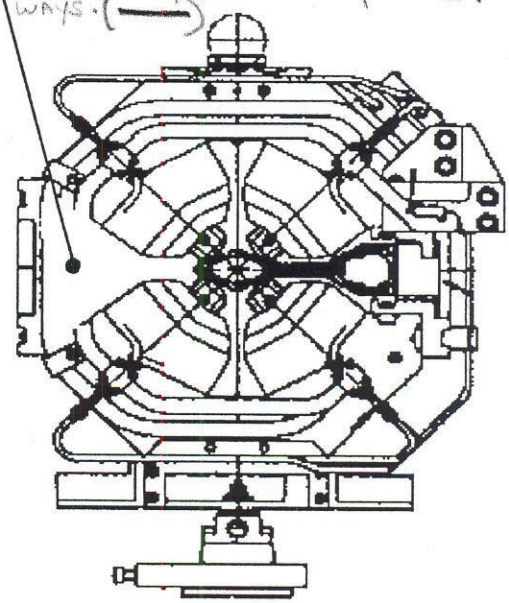

G-1 AQ1-AQ3 G-3 AQ4-BQ4 G-5 BQ3-BQ1

DEB

Date 7/24/01

Vacuum Chamber Clearances

	Sector	AQ1/AQ3 Girder 1	AS2/AS3 Girder 2	AQ4/BQ4 Girder 3	BS3/BS2 Girder 4	BQ3/BQ1 Girder 5	(ZONE)
	1	X	X	X	X	X	ZONE F
7-24-01	2	X	X	X	X	X	ZONE A
	3	X	X	X	X	X	
	4	X	X	X	X	X	
	5	X	X	X	X	X	
	6	X	X	X	X	X	
	7	X	X	X	X	X	
	8	X	X	X	X	X	
	9	X	X	X	X	X	
7-24-01	10	X	X	X	X	X	ZONE B
	11	X	X	X	X	X	
	12	X	X	X	X	X	
	13	X	X	X	X	X	
	14	X	X	X	X	X	
	15	X	X	X	X	X	
	16	X	X	X	X	X	
	17	X	X	X	X	X	
7-23-01	18	X	X	X	X	X	ZONE C
	19	X	X	X	X	X	
	20	X	X	X	X	X	
	21	X	X	X	X	X	
	22	X	X	X	X	X	
	23	X	X	X	X	X	
7-24-01	24	X	X	X	X	X	ZONE D
	25	X	X	X	X	X	
	26	X	X	X	X	X	
	27	X	X	X	X	X	
	28	X	X	X	X	X	
	29	X	X	X	X	X	
7/18/01 —	30	X	X	X	X	X	ZONE E
	31	X	X	X	X	X	
	32	X	X	X	X	X	
	33	X	X	X	X	X	
	34	X	X	X	X	X	
	35	X	X	X	X	X	
7-20-01	36	X	X	X	X	X	ZONE F
	37	X	X	X	X	X	
	38	X	X	X	X	X	
	39	X	X	X	X	X	
	40	X	X	X	X	X	

DEB

Vacuum Chamber Clearances

Date 1-16-00
DEB

Sector	AQ1/AQ3 Girder 1	AS2/AS3 Girder 2	AQ4/BQ4 Girder 3	BS3/BS2 Girder 4	BQ3/BQ1 Girder 5	
1	X	X	X	X	X	ZONE-F
2	X	X	X	X	X	ZONE-A
3	X	X	X	X	X	
4	X	X	X	X	X	
5	X	X	X	X	X	
6	X	X	X	X	X	
7	X	X	X	X	X	
8	X	X	X	X	X	
9	X	X	X	X	X	
10	X	X	X	X	X	
11	X	X	X	X	X	
12	X	X	X	X	X	
13	X	X	X	X	X	ZONE B
14	X	X	X	X	X	
15	X	X	X	X	X	
16	X	X	X	X	X	
17	X	X	X	X	X	
18	X	X	X	X	X	
19	X	X	X	X	X	
20	X	X	X	X	X	ZONE C
21	X	X	X	X	X	
22	X	X	X	X	X	
23	X	X	X	X	X	
24	X	X	X	X	X	
25	X	X	X	X	X	
26	X	X	X	X	X	ZONE D
27	X	X	X	X	X	
28	X	X	X	X	X	
29	X	X	X	X	X	
30	X	X	X	X	X	
31	X	X	X	X	X	
32	X	X	X	X	X	zone E
33	X	X	X	X	X	
34	X	X	X	X	X	
35	X	X	X	X	X	
36	X	X	X	X	X	
37	X	X	X	X	X	ZONE F
38	X	X	X	X	X	
39	X	X	X	X	X	
40	X	X	X	X	X	