Date: 9-17-04

DEB & Cheryl

Vacuum Chamber Clearances

	Sector	Girder 1	Girder 2	Girder 3	Girder 4	Girder 5
F	1					
	2					
A	3					
	4					
	5					
	6					
	7					
	8					
	9					
	10					
B	11					
	12					
	13					
	14					
	15					
	16					
	17					
	18					
	19					
	20					
	21					
C	22					
	23					
	24			S24B'S3		
	25					
	26					
D	27					
	28					
	29					
	30					
	31					
E	32					
	33					
	34					
	35					
F	36					
	37					
	38					
	39					
	40					

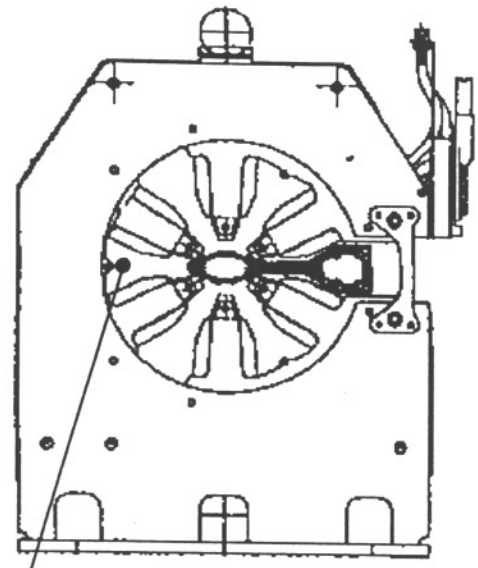

G-2 AS2-AS3

G-4 BS3-BS2

Go-Nogo Here- Downstream end

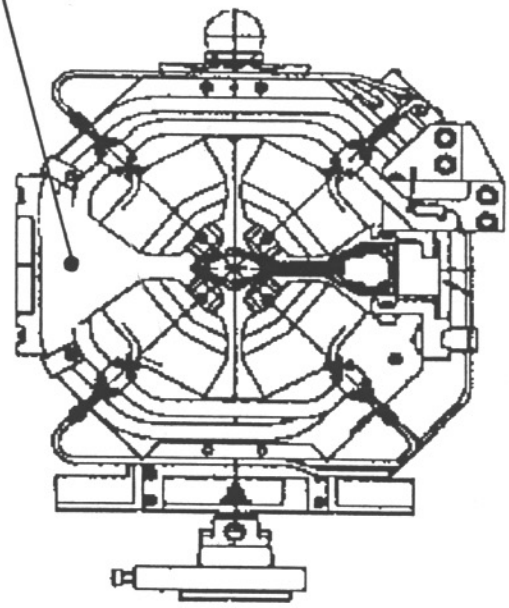

G-1 AQ1-AQ3

G-3 AQ4-BQ4

G-5 BQ3-BQ1