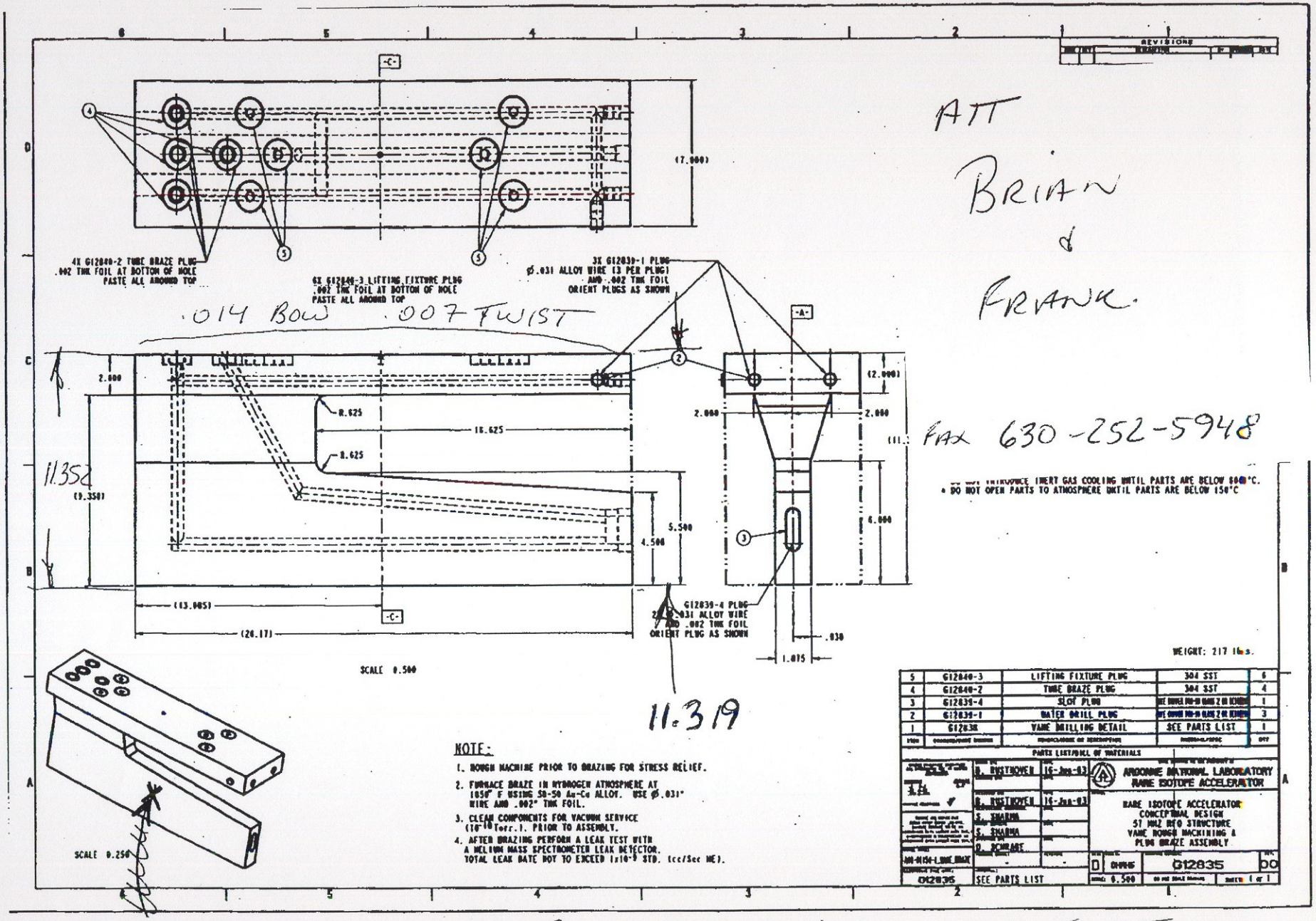

ATT
BRIAN
&
FRANK.

FAX 630-252-5948

.014 BOW .007 TWIST

11.319

2" THICK BASE ON SURFACE PLATE. .014 B.O.W. .006 TWIST.
1-2-3 BLOCKS 4 CORNERS.