REVISIONS					
ZONE	REV.	DESCRIPTION	BY	APPROVED	DATE

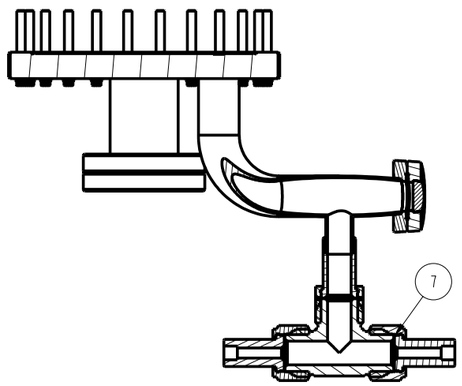

SECTION B-B

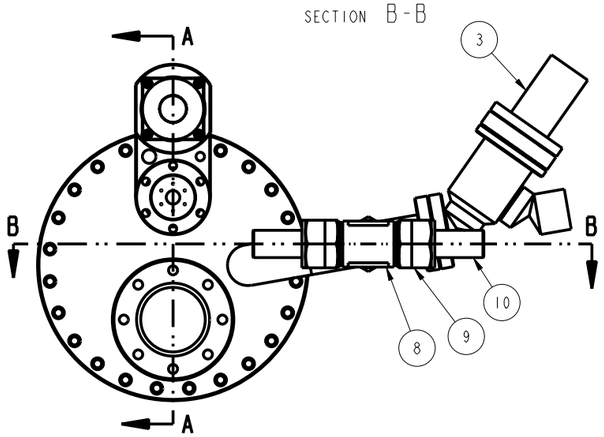

SCALE 3:8

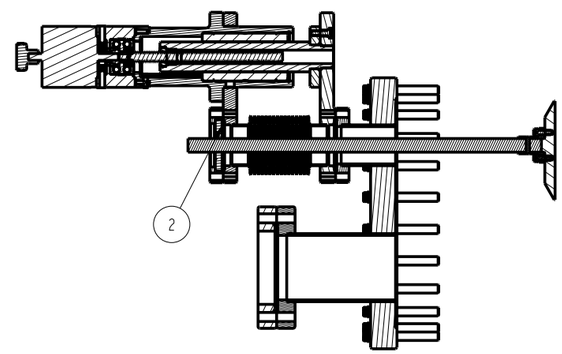

SECTION A-A

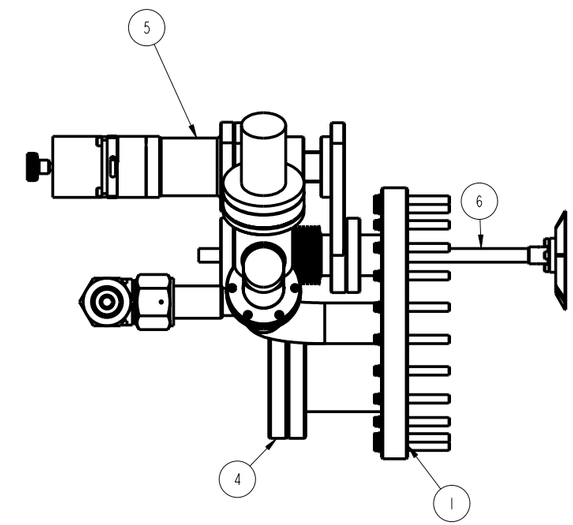

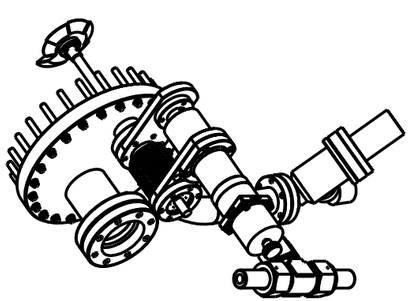

SCALE 1:4

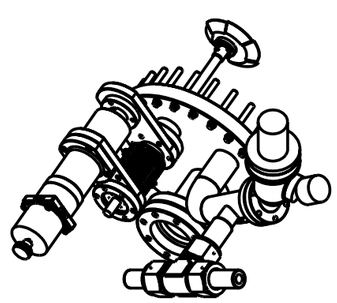

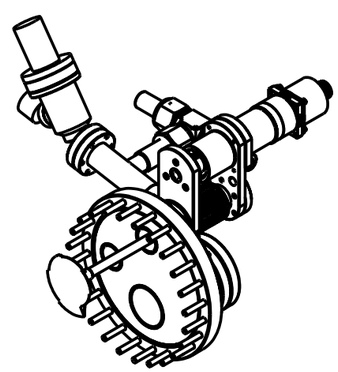

SCALE 1:4

[2] SOURCE OR EQUIVALENT
MDC VACUUM PRODUCTS, INC.
23842 CABOT BOULEVARD
HAYWARD, CA. 94545-1651
(510) 265-3500
www.mdc-vacuum.com

[1] SOURCE OR EQUIVALENT
CHICAGO FLUID SYSTEMS TECH.
360 WINDY POINT DRIVE
GLENDALE HEIGHTS, IL 60139
630-545-0003
SWAGELOK

[3] SOURCE OR EQUIVALENT
McMASTER CARR
P.O. BOX 4355
CHICAGO, IL 60680-4355
(630) 833-0300
www.mcmaster.com

NOTE:

1 THE USE OF SULPHUR BEARING OILS OR ABRASIVES IS PROHIBITED.

2 PROCESSES SUCH AS GRINDING, AND OR POLISHING THAT MAY RESULT IN EMBEDDED CONTAMINATION OF THE PART ARE PROHIBITED.

3 USE ONLY CIMCOOL, KOOLMIST #77, MOBIL CUT-MAX, MISSILE LUBE #5, OR AN ANL APPROVED EQUAL LUBRICANT FOR MACHINING.

4 PRIOR TO SHIPPING ALL SURFACES OF THE PART ARE TO BE THOROUGHLY CLEANED, AND FREE OF ALL OIL AND OR SOLUTIONS.

ITEM	DRAWING/PART NUMBER	NOMENCLATURE OR DESCRIPTION	MATERIAL/SPEC	QTY
14	91845A125	5/16-24 HEX NUT	18-8 SST	8
13	91845A105	1/4-28 HEX NUT	18-8 SST	12
12	190063	5/16-24 12 POINT BOLT	SST	8
11	190061	1/4-28 12 POINT BOLT	SST	12
10	SS-16-VCR-3-BL	1" VCR BLIND	SST	2
9	SS-16-VCR-1	1" VCR FEMALE NUT	SST	3
8	SS-16-VCR-T	1" VCR TEE	SST	1
7	SS-16-VCR-2-VS	1" VCR GASKET	SST	3
6	G13670	TARGET ASSEMBLY	SEE PARTS LIST	1
5	3105040302-430100	MOTOR DRIVE ASSEMBLY	SEE PARTS LIST	1
4	450022	4 1/2" QUARTZ VIEWPORT	SEE PART LIST	1
3	-----	VACUUM VALVE	SEE PART LIST	1
2	191147	2 3/4" COPPER GASKET	COPPER	3
1	G13681	TARGET FLANGE WELDMENT	304 SST	1

PARTS LIST/BILL OF MATERIALS

UNLESS OTHERWISE SPECIFIED ALL DIMENSIONS ARE IN INCHES
TOLERANCES
DECIMALS: .X ±.1; .XX ±.01; .XXX ±.005
ANGULAR ±.5°
SURFACE ROUGHNESS

REMOVE ALL BURRS AND BREAK SHARP EDGES .03 MAX.
SURFACE TEXTURE TO BE IN ACCORDANCE WITH LATEST ANSI B46.1
DIMENSIONING & TOLERANCING IN ACCORDANCE WITH LATEST ANSI Y14.5

MODEL NAME: MOTOR-FLANGE

ELECTRONIC FILE NAME: G13680

DRAWN BY: B. RUSTHOVEN — DATE: 08-Sep-04
CHECKED BY: — DATE:
DESIGNED BY: B. RUSTHOVEN — DATE: 08-Sep-04
RESPONSIBLE ENGINEER: S. SHARMA — DATE:
GROUP LEADER: S. SHARMA — DATE:
APPROVED BY: — DATE:
RELEASE LEVEL: - — VERSION: -
MATERIAL: SEE PARTS LIST

THIS DRAWING IS THE PROPERTY OF
ARGONNE NATIONAL LABORATORY
RARE ISOTOPE ACCELERATOR

TITLE:
RARE ISOTOPE ACCELERATOR
THIN LITHIUM FILM
TARGET FLANGE ASSEMBLY

SIZE: D | FSCM No: 0HRH5 | DRAWING NUMBER: G13680 | REV. 00
SCALE: 3:8 | DO NOT SCALE DRAWING | SHEET 1 OF 1