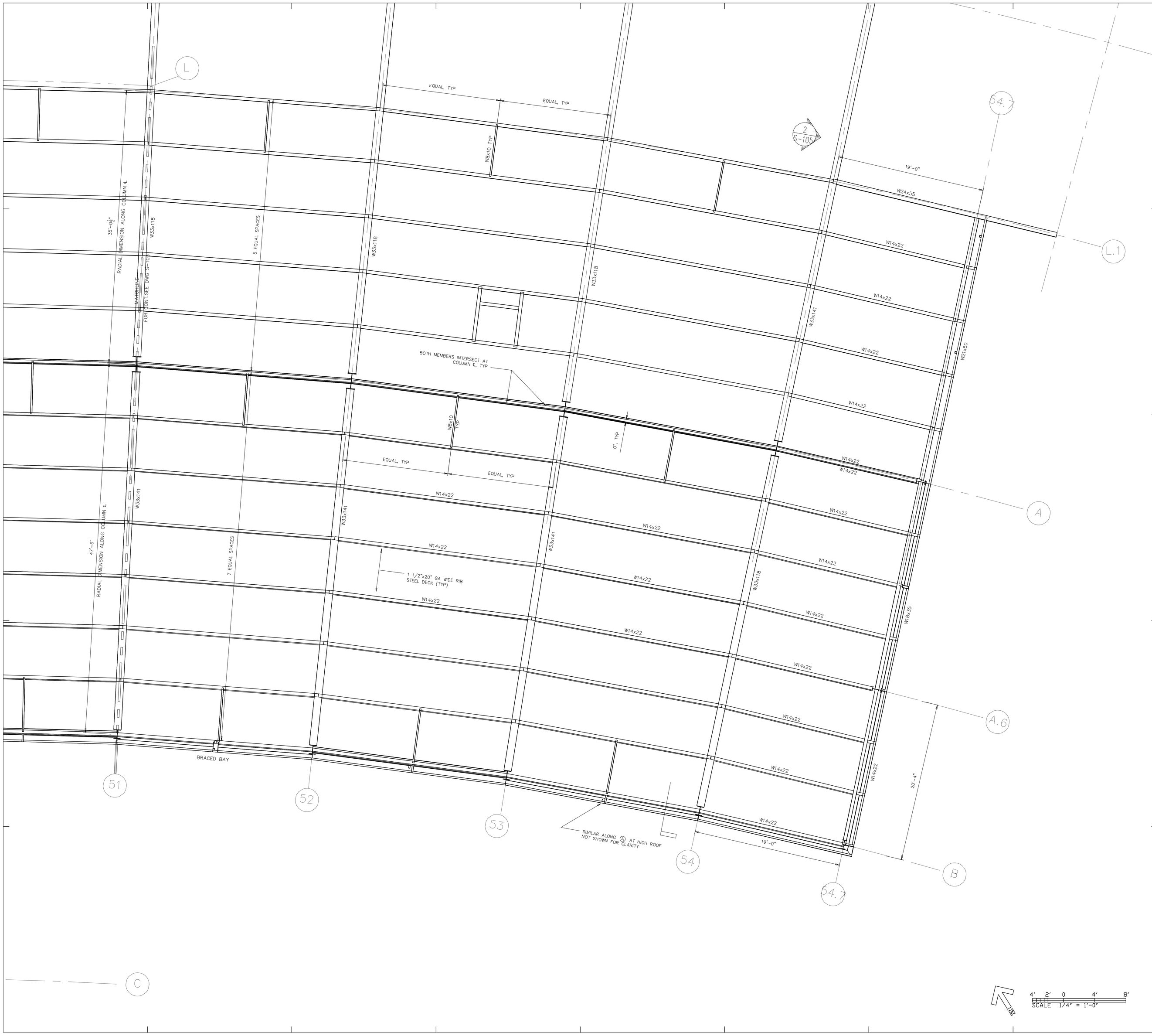

Advanced Photon Source
ARGONNE NATIONAL LABORATORY

Piping Design Consultants
200 E. HOWARD
Suite 236
DesPlaines, Illinois,60018

847-795-9800

LEVEL 1

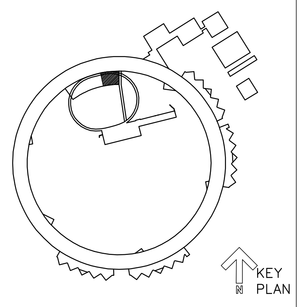

RF BLDG. 420

THIS DRAWING IS THE PROPERTY OF
ARGONNE
NATIONAL LABORATORY

PROJECT TITLE
ADVANCED PHOTON SOURCE
CONVENTIONAL FACILITIES
PROJECT NO. ANL 01907 KNIGHT 4900

DOCUMENT TITLE
ROOF FRAM.PLAN-EAST
S-102

DRAWN BY A/E- ANL-	PROJECT MANAGER A/E- DATE02-04-01	BINDING ORDER
DESIGNED BY A/E- ANL-	PROJECT MANAGER ANL-	FACILITY NO(S)
CHECKED BY A/E- ANL-	ANL APPROVAL DATE	
MSTR. DISK ID / VOL. NO.	FILE NAME / STATUS Filename	

FACILITY DOCUMENT NUMBER
JO 411 -001WA A000

WBS DOCUMENT NUMBER
7103 001 AA