PACKAGE
Title1
Title2
USERNAME

AREA1 AREA3
Filename
Date _ Time

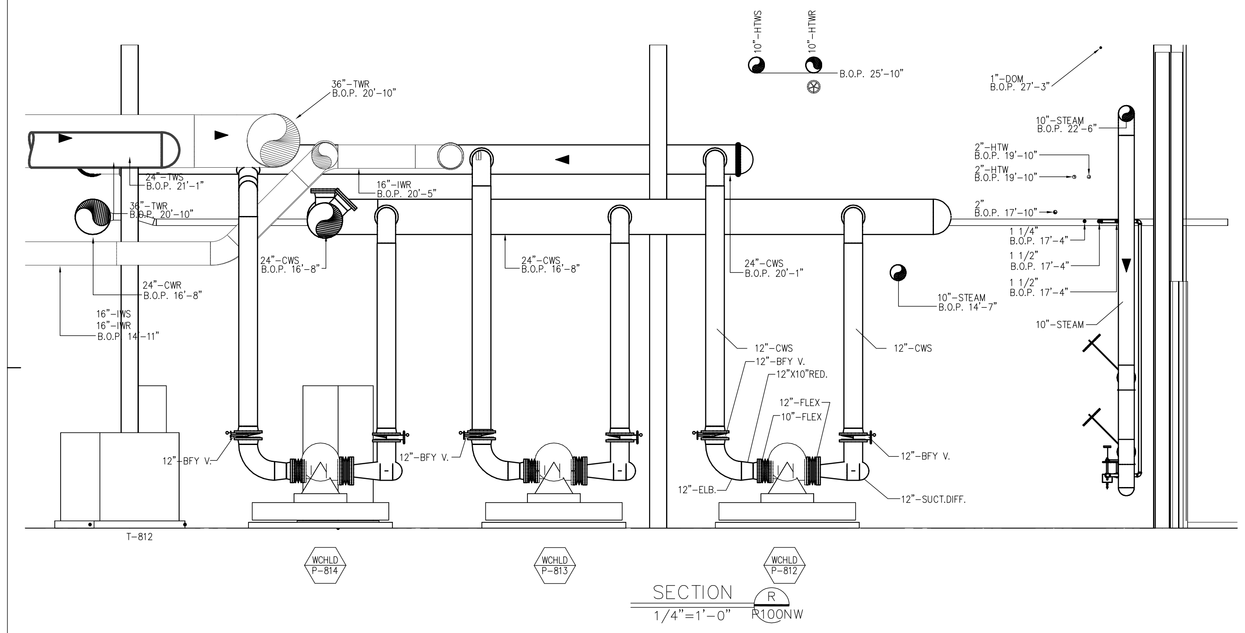

SECTION
1/4"=1'-0" R100NW

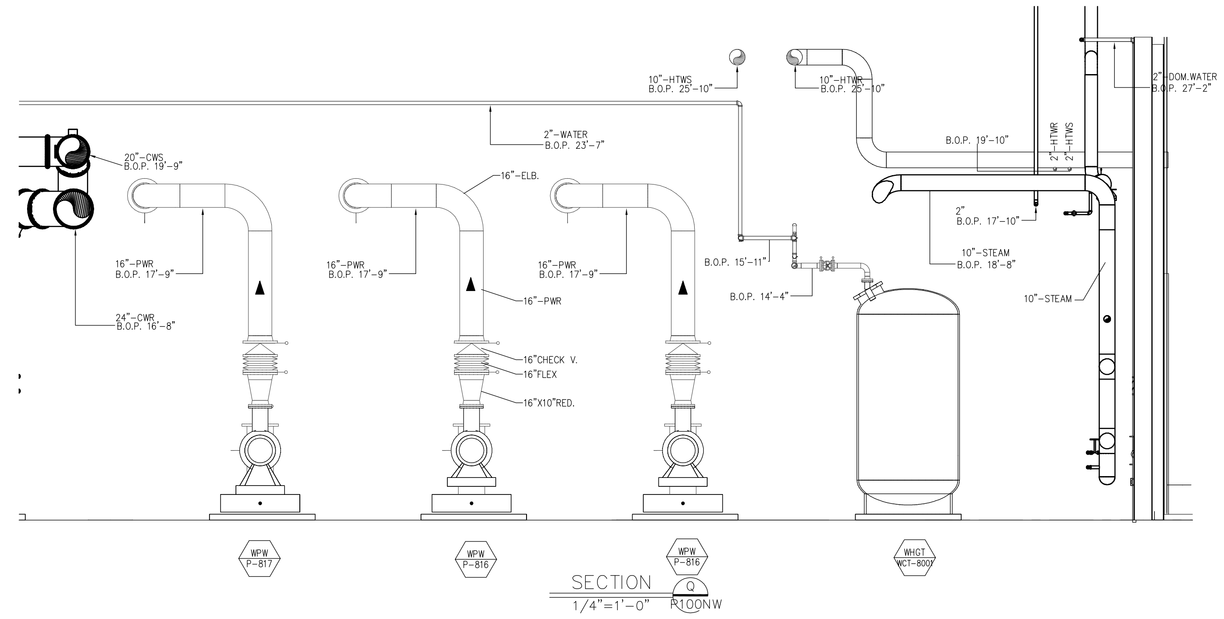

SECTION
1/4"=1'-0" R100NW

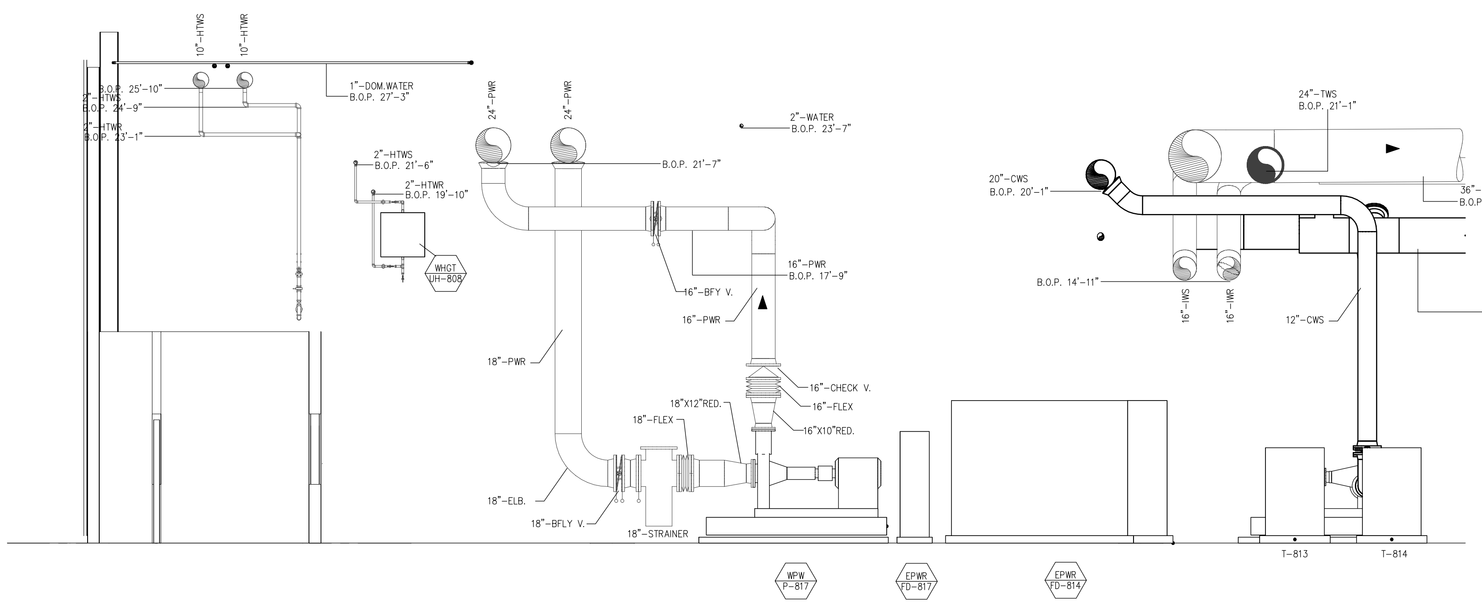

SECTION
1/4"=1'-0" S DWG

PACKAGE
Piping Plan
Utility Building
USERNAME

AREA1 AREA3
Filename
Date _ Time

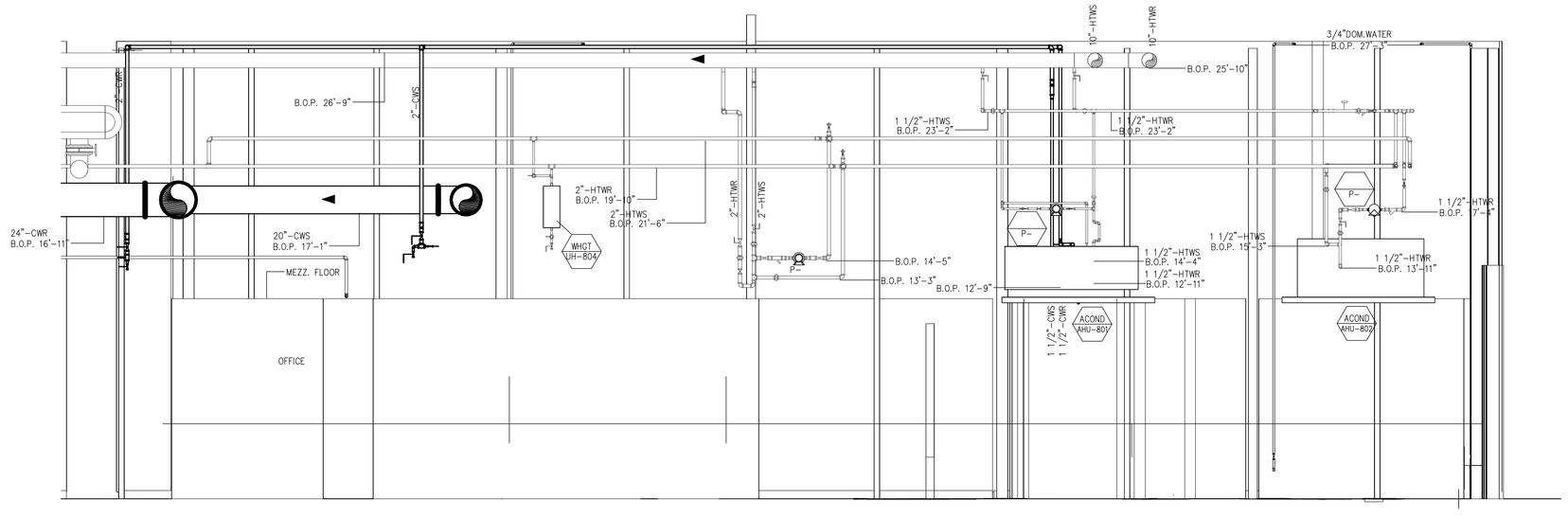

SECTION
1/4"=1'-0" P R100NW

PIPING SECTIONS
SCALE 1/4"=1'-0"

PRELIMINARY
FOR REVIEW ONLY

4' 2' 0 4' 8'
SCALE 1/4" = 1'-0"

Advanced
Photon
Source
ARGONNE NATIONAL LABORATORY

Piping Design Consultants
200 E. HOWARD
Suite 236
DesPlaines, Illinois,60018

847-795-9800

LEVEL 1

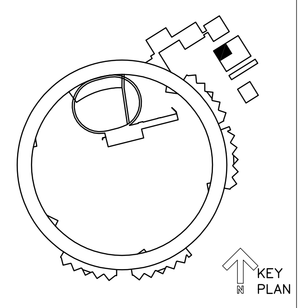

UTILITY BLDG. 450

THIS DRAWING IS THE PROPERTY OF
ARGONNE
NATIONAL LABORATORY

PROJECT TITLE
ADVANCED PHOTON SOURCE
CONVENTIONAL FACILITIES

PROJECT NO. ANL 01907 KNIGHT 4900

DOCUMENT TITLE
Piping Plan Sections
P100NW-SEC

DRAWN BY A/E- ANL-	PROJECT MANAGER A/E- DATE-07-10-09	BINDING ORDER
DESIGNED BY A/E- ANL-	PROJECT MANAGER ANL-	FACILITY NO(S)
CHECKED BY A/E- ANL-	ANL APPROVAL DATE	
MSTR. DISK ID / VOL. NO.	FILE NAME P100NW-SEC / STATUS	

FACILITY DOCUMENT NUMBER
JO 411 -001W -

WBS DOCUMENT NUMBER
7103 001

PLOT DATE Date _ Time PLOT PLT_NUM PLOT SCALE 1/4"=1'-0" FILENAME: Filename PACKAGE: