PACKAGE
Title1
Title2
USERNAME

AREA1 AREA3
Filename
Date _ Time

PACKAGE
Piping Plan
Utility
USERNAME

AREA1 AREA3
Filename
Date _ Time

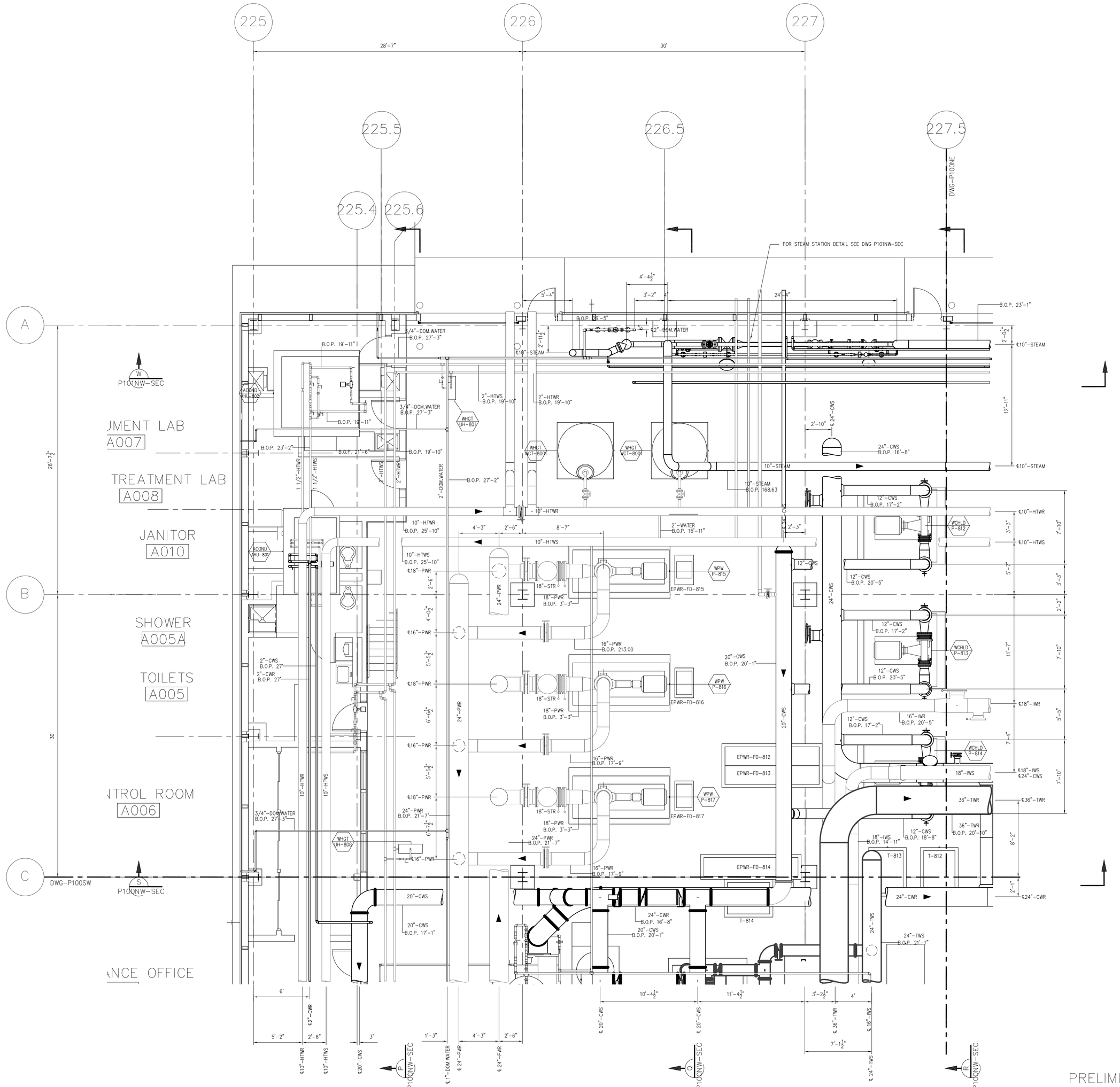

PIPING PLAN-NW
SCALE 1/4"=1'-0"

PRELIMINARY
FOR REVIEW ONLY

SCALE 1/4" = 1'-0"

Advanced
Photon
Source
ARGONNE NATIONAL LABORATORY

Piping Design Consultants
200 E. HOWARD
Suite 236
DesPlaines, Illinois,60018

847-795-9800

LEVEL 1

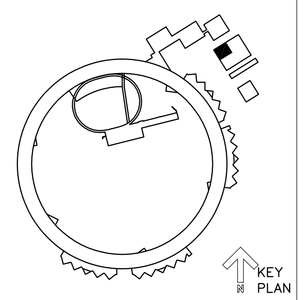

UTILITY BLDG. 450

THIS DRAWING IS THE PROPERTY OF
ARGONNE
NATIONAL LABORATORY

PROJECT TITLE
ADVANCED PHOTON SOURCE
CONVENTIONAL FACILITIES
PROJECT NO. ANL 01907 KNIGHT 4900
DOCUMENT TITLE
NW Piping Plan
P100NW

DRAWN BY A/E- ANL-	PROJECT MANAGER A/E- DATE-07-10-00	BINDING ORDER
DESIGNED BY A/E- ANL-	PROJECT MANAGER ANL-	FACILITY NO.(S)
CHECKED BY A/E- ANL-	ANL APPROVAL DATE	

MSTR. DISK ID	VOL. NO.	FILE NAME	STATUS
		P100NW	

FACILITY DOCUMENT NUMBER
JO 411 -001W -
WBS DOCUMENT NUMBER
7103 001

PLOT DATE Date _ Time PLOT PLT_NUM PLOT SCALE 1/4"=1'-0" FILENAME: Filename PACKAGE: