ENCLOSURE EN-80101, DIGITAL ASC FOR AHU-4001

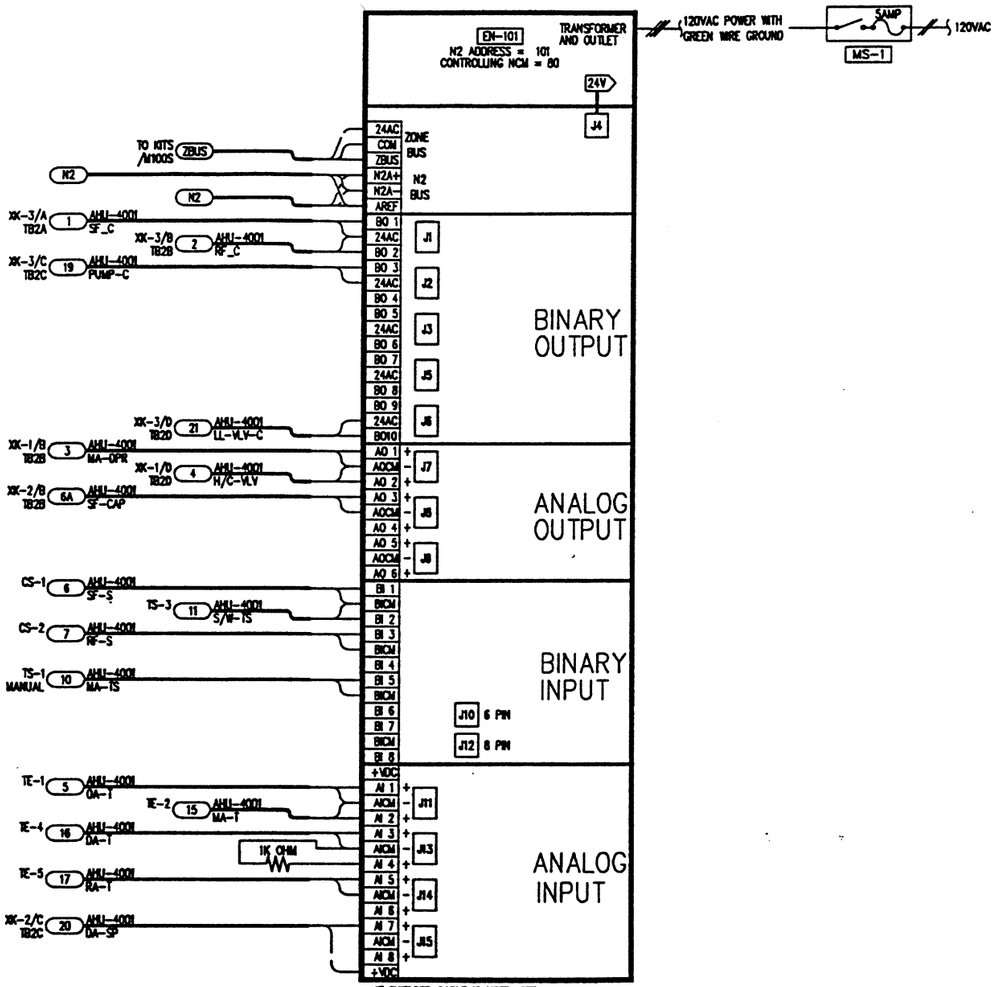

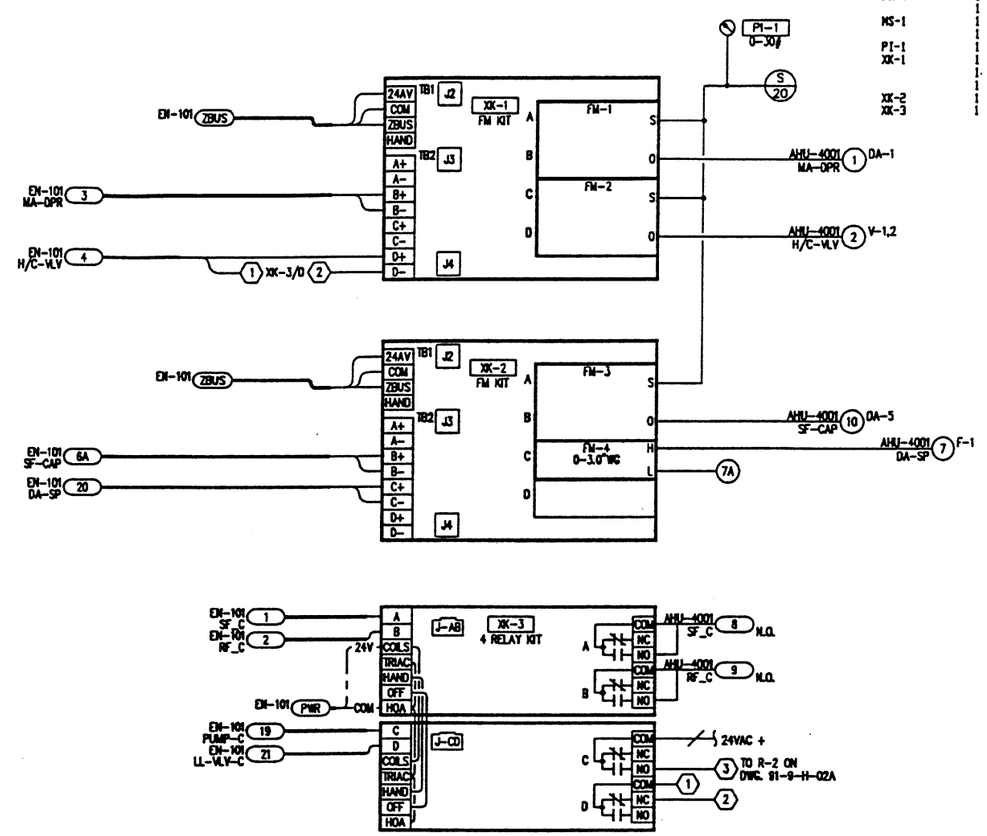

PANEL MATERIAL

DEVICE TAG	QTY	CODE NUMBER	DESCRIPTION
EN-101	1	AS-AHU101-0	AIR HANDLING UNIT ENC/TER
	1	AS-AHU102-0	AIR HANDLING UNIT LOGIC B
	1	AS-XFR100-1	TRANSFORMER KIT;120/240
FN-1-FN-3	3	FN-OAP102-0	OAP MANUAL MODULE
	3	FN-OAP103-0	E/P OUT FN FOR ASC
FN-4	1	FN-IDP030-0	DIFF PRESS; INPUT 0/3.00"
	1	FN-PCN101-0	PNEU.CONN.MOD.
MS-1	1	PD-112-22	BUSS SSU FUSE HOLDER/
	1	PD-112-23	FUSE T-5 (5AMP) FOR
PI-1	1	G-2818-5	AIR GAGE 1-1/2"
XK-1	1	AS-FMK100-0	FUNCTION MOD KIT-4 SLOTS
	1	AS-AHU102-0	AIR HANDLING UNIT LOGIC B
	1	AS-XFR100-1	TRANSFORMER KIT;120/240
XK-2	1	AS-FMK100-0	FUNCTION MOD KIT-4 SLOTS
XK-3	1	AS-RLY100-1	4-RELAY W/ENCLOSURE

BAY	TERM	XDUCER	DEVICE	SYSTEM	OBJECT	EXPANDED ID	REFERENCE DETAIL
** CONTROLLER:	EN-101						
24VAC	——		XK-5				A-ENC-RLY
AI	AI1	——	TE-1	AHU-4001	OA-T	OUTSIDE AIR TEMP	A-RTD-2SHLD
AI	AI2	——	TE-2	AHU-4001	MA-T	MIXED AIR TEMP	A-RTD-2TWIST-L
AI	AI3	——	TE-4	AHU-4001	DA-T	DISCHARGE AIR TEMP	A-RTD-2TWIST-L
AI	AI5	——	TE-5	AHU-4001	RA-T	RETURN AIR TEMP	A-RTD-2TWIST-L
AI	AI7	——	XK-2/C	AHU-4001	DA-SP	DISCH AIR STATIC PRESS	A-FMK-AI-2SHLD
AO	AO1	——	XK-1/B	AHU-4001	MA-OPR	MIXED AIR DAMPERS	A-FMK-AO-2SHLD
AO	AO2	——	XK-1/D	AHU-4001	H/C-VLV	HEATING/COOLING VALVES	A-FMK-AO-2SHLD
AO	AO3	——	XK-2/B	AHU-4001	SF-CAP	SUPPLY FAN CAPACITY	A-FMK-AO-2SHLD
DI	DI1	——	CS-1	AHU-4001	SF-S	SUPPLY FAN STATUS	A-DIN-2SHLD-N
DI	DI2	——	TS-3	AHU-4001	S/W-TS	SUM/WINTER TEMP SENSOR	A-DIN-2SHLD-O
DI	DI3	——	CS-2	AHU-4001	RF-S	RETURN FAN STATUS	A-DIN-2SHLD-N
DI	DI5	——	TS-1	AHU-4001	MA-TS	MIXED AIR TEMP SENSOR	A-DIN-2SHLD-O
DO	DO1	——	XK-3/A	AHU-4001	SF_C	SUPPLY FAN CONTROL	A-RLY-DO-2SHLD
DO	DO10	——	XK-3/D	AHU-4001	LL-VLV-C	LOW LIMIT VALVE CONTROL	A-RLY-DO-2SHLD
DO	DO2	——	XK-3/B	AHU-4001	RF_C	RETURN FAN CONTROL	A-RLY-DO-2SHLD
DO	DO3	——	XK-3/C	AHU-4001	PUMP-C	PUMP CONTROL	A-RLY-DO-2SHLD
BUS	ZBUS	——	XK-1				——
			XK-2				
N2BUS	IN						A-N2-3TWIST-3TWIST
N2BUS	OUT						A-N2-3TWIST-3TWIST
X-FMR	120VA		120VAC				A-ENC-POWER
			120VAC				

IN CONSIDERATION OF THE RECEIPT OF THIS DOCUMENT, THE RECIPIENT AGREES NOT TO REPRODUCE, COPY, USE OR TRANSMIT THIS DOCUMENT AND/OR THE INFORMATION THEREIN CONTAINED, IN WHOLE OR IN PART, OR TO SUFFER SUCH ACTION BY OTHERS, FOR ANY PURPOSE, EXCEPT WITH THE WRITTEN PERMISSION OF JOHNSON CONTROLS, INC. AND FURTHER AGREES TO SURRENDER SAME TO JOHNSON CONTROLS, INC. UPON DEMAND.

COPYRIGHT JOHNSON CONTROLS, INC.1995

DRAWING TITLE
ENCLOSURE EN-80101
AHU

PROJECT
The Argonne National Labs
APS Users Residance Facility
9700 Cass Avenue South
Argonne, IL 60439

NO.	REVISION—LOCATION	ECN	DATE	BY
2	AS BUILT		07/08/96	SAC
1	GENERAL		08/11/95	SF

REFERENCE DRAWING			
SALES ENGR	PROJECT MGR	APPL. ENGR	DRAWN
JS	SF	DCS	BY SF DATE 04/27/95

APPROVED BY DATE

JOHNSON CONTROLS
Systems & Services Division
3007 Malmo Drive
Arlington Hts., IL
60005
847-364-1500

CONTRACT NUMBER 95010-1013

DRAWING NUMBER 91-9-H-02B

FILE: EN-101