ENCLOSURE EN-01104, DX-9100 FOR H/CW HEAT EXCHANGER

PANEL MATERIAL

DEVICE TAG	QTY	CODE NUMBER	DESCRIPTION
ACC	1	M-0000-393	SCREW-ON LAMCOID NAME-
ACC	70	PD-113-15	TERM SEC MINIATURE 300V
EN-01104	1	DX-9100-8454	DIGITAL CONTR.; EXTENDED
EP-1-EP-2	2	EP-8000-4	EP TRANSD.; 4/20MILLI-A H
	2	A-4000-137	FILTER; OIL, IN-LINE
MS-1	1	PD-112-22	BUSS SSU FUSE HOLDER/
	1	PD-112-23	FUSE T-5 (SAMP) FOR
P-1	1	M-8100-1824	CONTROL CABINET;STD. FACE
PI-1-PI-3	3	G-2010-5	AIR GAGE 1-1/2"
TX-1	1	Y66AUD-1C	TRANSFORMER

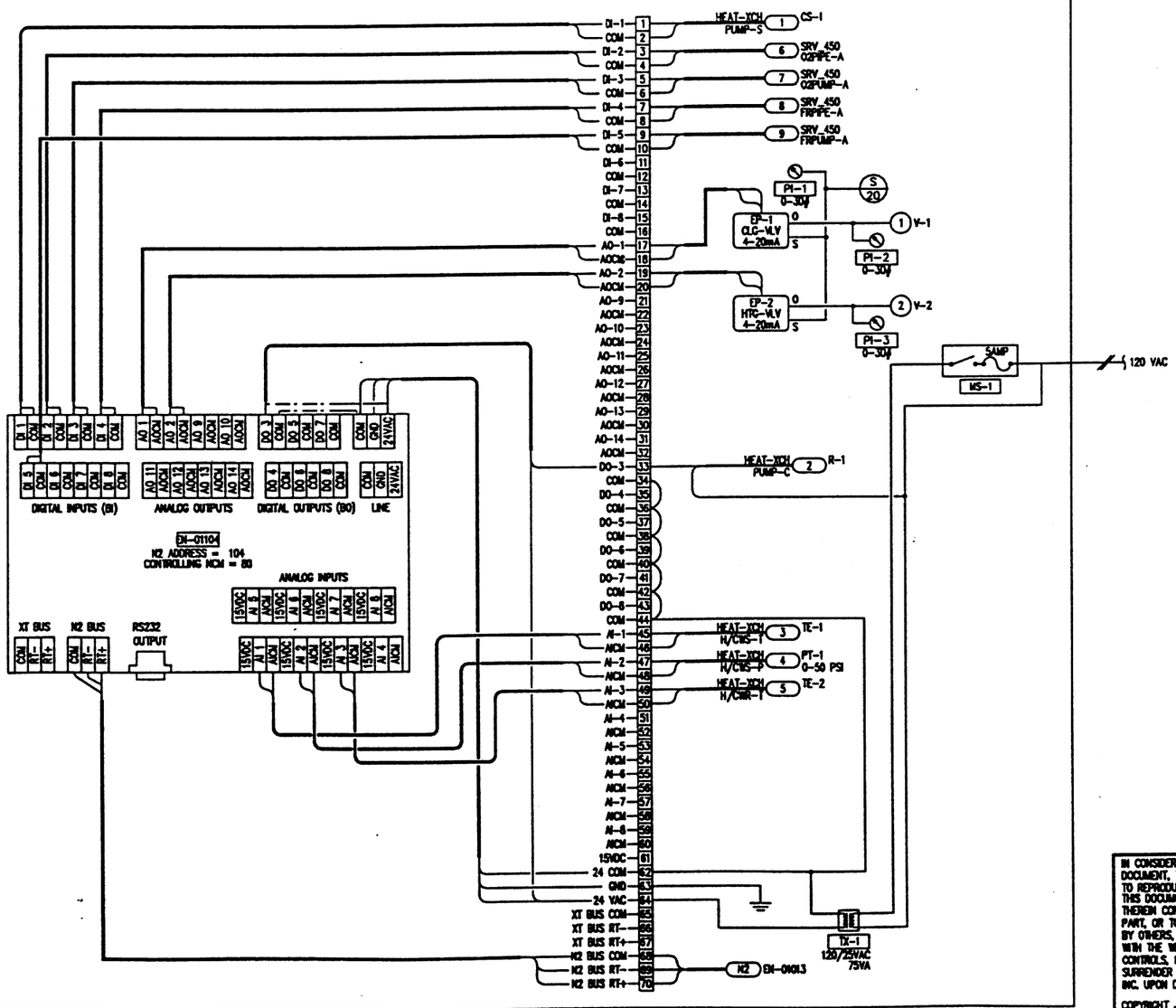

BAY	TERM	XDUCER	DEVICE	SYSTEM	OBJECT	EXPANDED ID	REFERENCE DETAIL
XM	CONTROLLER: EN-1104						
AI	AI1	——	TE-1	HEAT-XCH	H/CWS-T	H/CWS TEMP	L-RTD-2SHLD
AI	AI2	——	PT-1	HEAT-XCH	H/CWS-P	H/CW PRESSURE	L-VDC-DF-2SHLD
AI	AI3	——	TE-2	HEAT-XCH	H/CWR-T	H/CWR TEMP	L-RTD-2SHLD
AO	AO1	——	EP-1	HEAT-XCH	CLG-VLV	COOLING VALVE	L-mA-OUTP-2SHLD
AO	AO2	——	EP-2	HEAT-XCH	HTG-VLV	HEATING VALVE	L-mA-OUTP-2SHLD
DI	DI1	——	CS-1	HEAT-XCH	PUMP-S	PUMP STATUS	L-DIN-2SHLD-M
DI	DI2	——		SRV_450	O2PIPE-A	OXYGEN PIPE PIT ALARM	L-DIN-2SHLD-M
DI	DI3	——		SRV_450	O2PUMP-A	OXYGEN PUMP PIT ALARM	L-DIN-2SHLD-M
DI	DI4	——		SRV_450	FRPIPE-A	FREON PIPE PIT ALARM	L-DIN-2SHLD-M
DI	DI5	——		SRV_450	FRPUMP-A	FREON PUMP PIT ALARM	L-DIN-2SHLD-M
DO	DO3	——	R-1	HEAT-XCH	PUMP-C	PUMP CONTROL	L-DOUT-24V-2SHLD

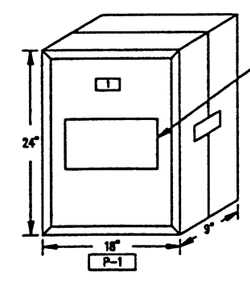

POTEAU PANEL FACILITY
PLEASE MOUNT DX-9100 IN PANEL FACE.

Nametag Schedule

Item	Device Tag	Nametag Description
1	-	DUAL TEMPERATURE HEAT EXCHANGE FOR THE USER RESIDENCE FACILIT ENCLOSURE EN-01104

IN CONSIDERATION OF THE RECEIPT OF THIS DOCUMENT, THE RECIPIENT AGREES NOT TO REPRODUCE, COPY, USE OR TRANSMIT THIS DOCUMENT AND/OR THE INFORMATION THEREIN CONTAINED, IN WHOLE OR IN PART, OR TO SUFFER SUCH ACTION BY OTHERS, FOR ANY PURPOSE, EXCEPT WITH THE WRITTEN PERMISSION OF JOHNSON CONTROLS, INC. AND FURTHER AGREES TO SURRENDER SAME TO JOHNSON CONTROLS, INC. UPON DEMAND.

COPYRIGHT JOHNSON CONTROLS, INC.1995

DRAWING TITLE
ENCLOSURE EN-01104
DX-9100

PROJECT
The Argonne National Labs
APS Users Residence Facility
9700 Cass Avenue South
Argonne, IL 60439

NO.	REVISION-LOCATION	ECN	DATE	BY
2	AS BUILT		07/08/96	SAC
1	GENERAL		09/11/95	SF

REFERENCE DRAWING			
SALES ENGR	PROJECT MGR	APPL. ENGR	DRAWN
JS	SF	DCS	BY SF DATE 06/15/95

APPROVED BY DATE

JOHNSON CONTROLS
Systems & Services Division
3007 Malmo Drive
Arlington Hts., IL
60005
847-364-1500

CONTRACT NUMBER 95010-1013

DRAWING NUMBER 91-9-H-04B

FILE: EN-1104