Bill of Material

FIELD MATERIAL

DEVICE TAG	QTY	CODE NUMBER	DESCRIPTION
DPT-1-DPT-3	3	PT-550-3-5-D	DIFFERENTIAL PRESS TRANSMITTER-TRIAD
FT-1-FT-3	6	YF110-ALS	FLOW METER-JYC
PS-1-PS-6	8	P74BA-1C	DIFFERENTIAL PRES CONTROL
PS-8-PS-9			
TE-1-TE-3	3	TEP-J000800	SENSOR, 100 OHM
	3	TE-6001-3	PACKING NUT & FTG.S
	3	WZ-1000-2	STAINLESS STEEL WELL,1/2"
	3	TD-6000	TEMP TRANSMITTER
V-1-1,V-1-3, V-2-1-V-2-3, V-3-1-V-3-2, V-4-1-V-4-3,	13	----	SEE VALVE SCHEDULE
EN-21100	1	AS-UNT111-0	DIGITAL CONTROLLER
	1	AS-XFR100-0	POWER SUPPLY
ACC	6	G-2010-5	AIR GAGE 1-1/2"

ANY MATERIAL WITH A (P) PRECEEDING THE DEVICE TAG IS CONSIDERED PROPRIETARY EQUIPMENT AND IS BEING SUPPLIED BY JOHNSON CONTROLS, INC. ALL OTHER MATERIAL IS NON-PROPRIETARY EQUIPMENT.

Motor Control

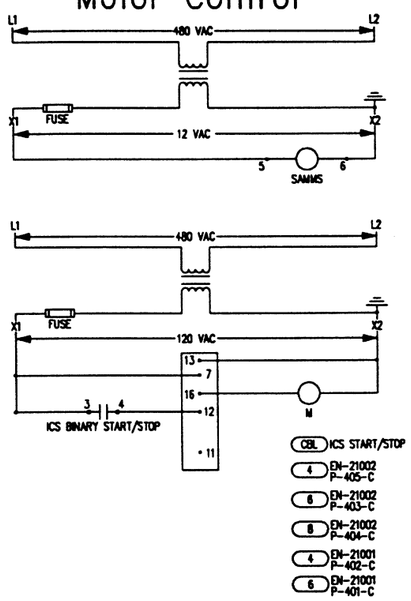

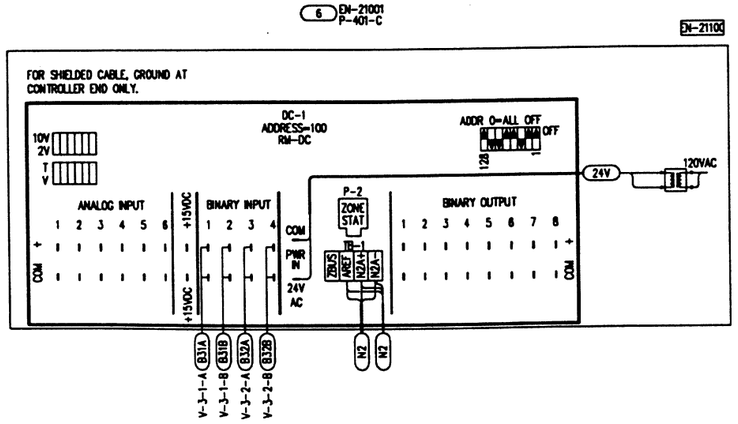

Process Water Flow Diagram for Building 410

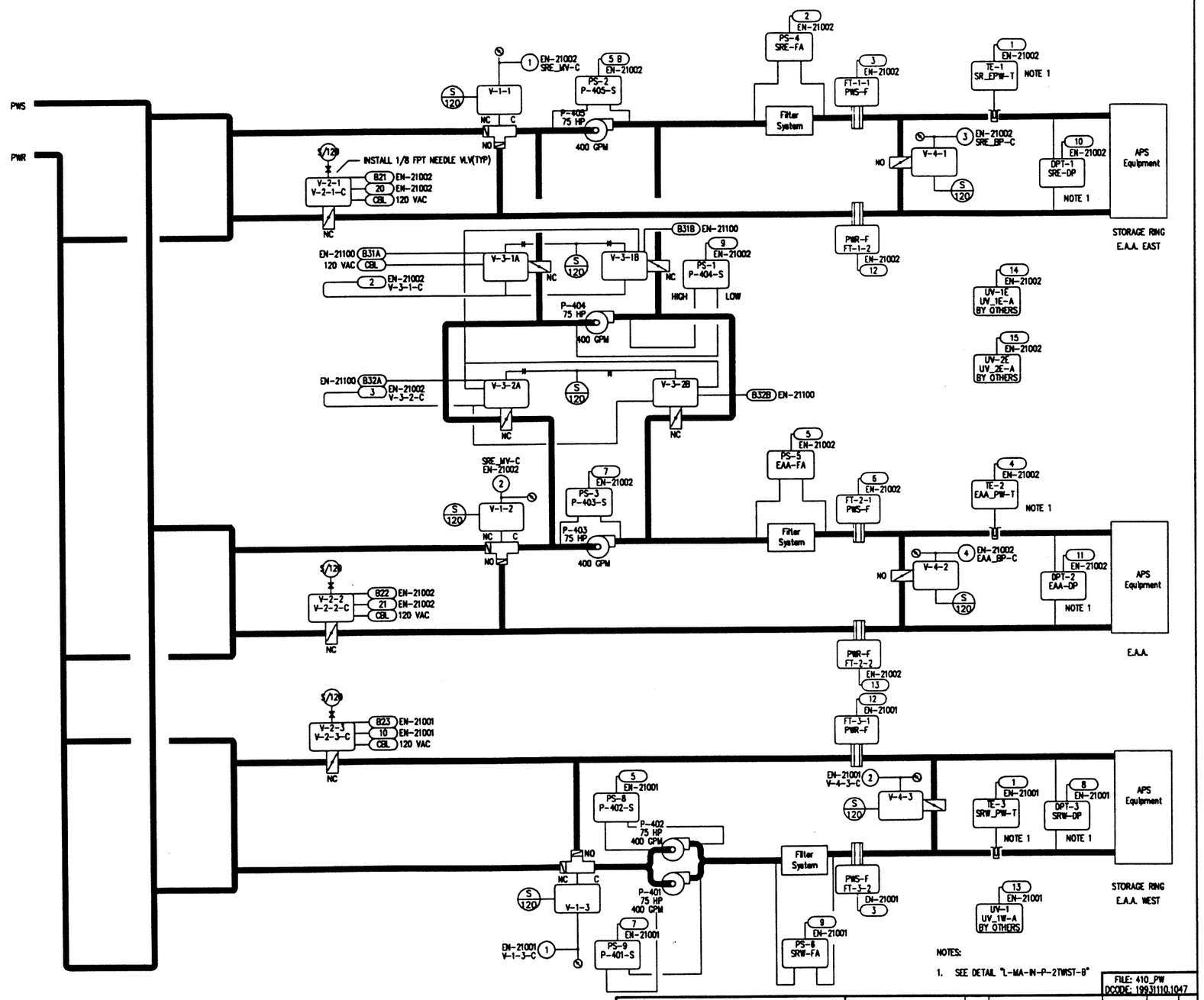

FILE: 410_PW
DCODE: 19931110.1047

DRAWING TITLE
Building 410, Process Water
Storage Ring, E.A.A East and
West and Early Assembly Area

REFERENCE DRAWING	NO.	REVISION-LOCATION	ECN	DATE	BY
		RECORD		06/08/94	SF

SALES ENGR	PROJECT MGR	APPL. ENGR	DRAWN		APPROVED	
P	SF	DCS	BY SF	DATE 11/25/91	BY	DATE

PROJECT
The Argonne National Labs
Advanced Photon Source Campus
9700 Cass Avenue South
Argonne, IL 60439

JOHNSON CONTROLS
Systems & Services Division

3007 WALMO ROAD
ARLINGTON HEIGHTS
ILLINOIS 60005
708/364-1500 Main
708/808-4438 Eng

CONTRACT NUMBER
91390-0009

DRAWING NUMBER
91-9-C-02A

COPYRIGHT JOHNSON CONTROLS, INC.1993