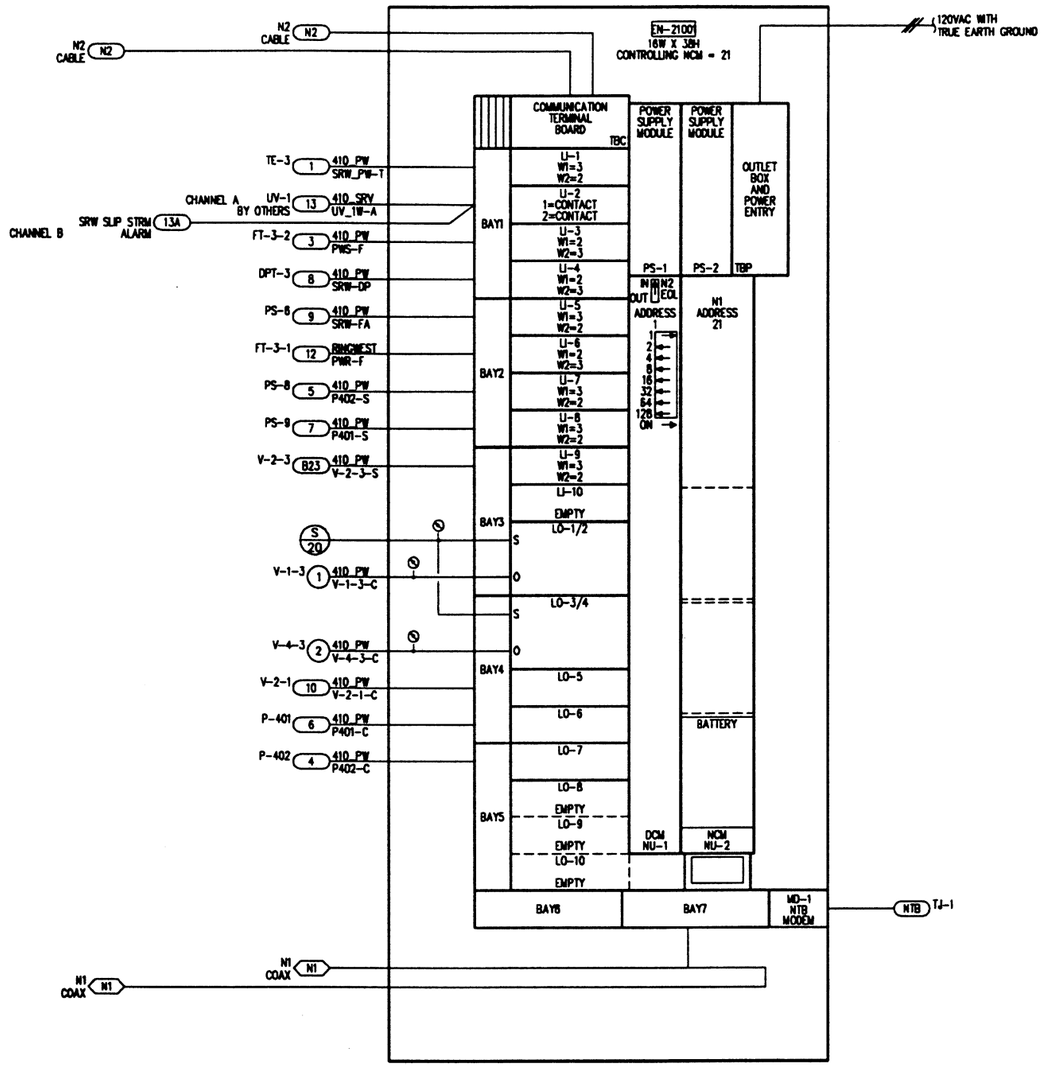

Enclosure, EN-21001, NEU Serving Building 410
Process Water(E.A.A. West Storage Ring)

PANEL MATERIAL

	DEVICE TAG	QTY	CODE NUMBER	DESCRIPTION
(P)	EN-21001	1	EN-BSF201-0	2 SLOT BASE FRAME
		1	EN-EWC200-0	NCU/NEU 16X30 ENCLOSURE
	LI-1, LI-3-LI-9	8	FM-IUN101-0	
	LI-2	1	FM-IBN101-0	2 BINARY INPUT FM
	LI-10, LO-8-LO-10	4	FM-KIT127-0	FM BLANKOFFS
	LO-1/2, LO-3/4	2	FM-OAP101-0	E/P OUT FM FOR DCM
		2	FM-OAP102-0	OAP MANUAL MODULE
	LO-5-LO-7	3	FM-ORL101-0	LATCH RELAY OUTPUT FM
	MD-1	1	IO-NTU113-0	LOCAL LINE DRIVER
	NU-1	1	NU-DCN101-0	DIGITAL CONTROL MODULE
	NU-2	1	NU-NCN200-0	NETWORK CONTROL MODULE
		1	094291	BNC CONNECTOR-ANIXTER
		1	NU-NIN102-0	NETWORK IDENTITY MODULE;
	PS-1-PS-2	2	NU-PWR101-0	POWER SUPPLY

NOTES:

1. ALL MATERIAL WITH (P) PRECEEDING THE DEVICE TAG IN THE BILL OF MATERIAL IS PROPRIETARY AND IS BEING SUPPLIED BY JOHNSON CONTROLS, INC. ALL OTHER MATERIAL IS NON-PROPRIETARY.

COPYRIGHT JOHNSON CONTROLS, INC.1993

FILE: EN-21001

DRAWING TITLE
Enclosure, EN-21001
Network Control Unit, NCU
Serving E.A.A/West/East
Storage Ring

RECORD 06/06/94 SF

REFERENCE DRAWING	NO.	REVISION-LOCATION	ECN	DATE	BY

SALES ENGR	PROJECT MGR	APPL. ENGR	DRAWN		APPROVED	
JP	SF	DCS	BY SF	DATE 12/12/91	BY	DATE

PROJECT
The Argonne National Labs
Advanced Photon Source Campus
9700 Cass Avenue South
Argonne, IL 60439

JOHNSON CONTROLS
Systems & Services Division

3007 MALMO ROAD
ARLINGTON HEIGHTS
ILLINOIS 60005
708/364-1500 Main
708/808-4438 Eng

CONTRACT NUMBER 91390-0009

DRAWING NUMBER 91-9-C-02D