Digital ASCs Serving the VAV Terminal Units for AHU-701

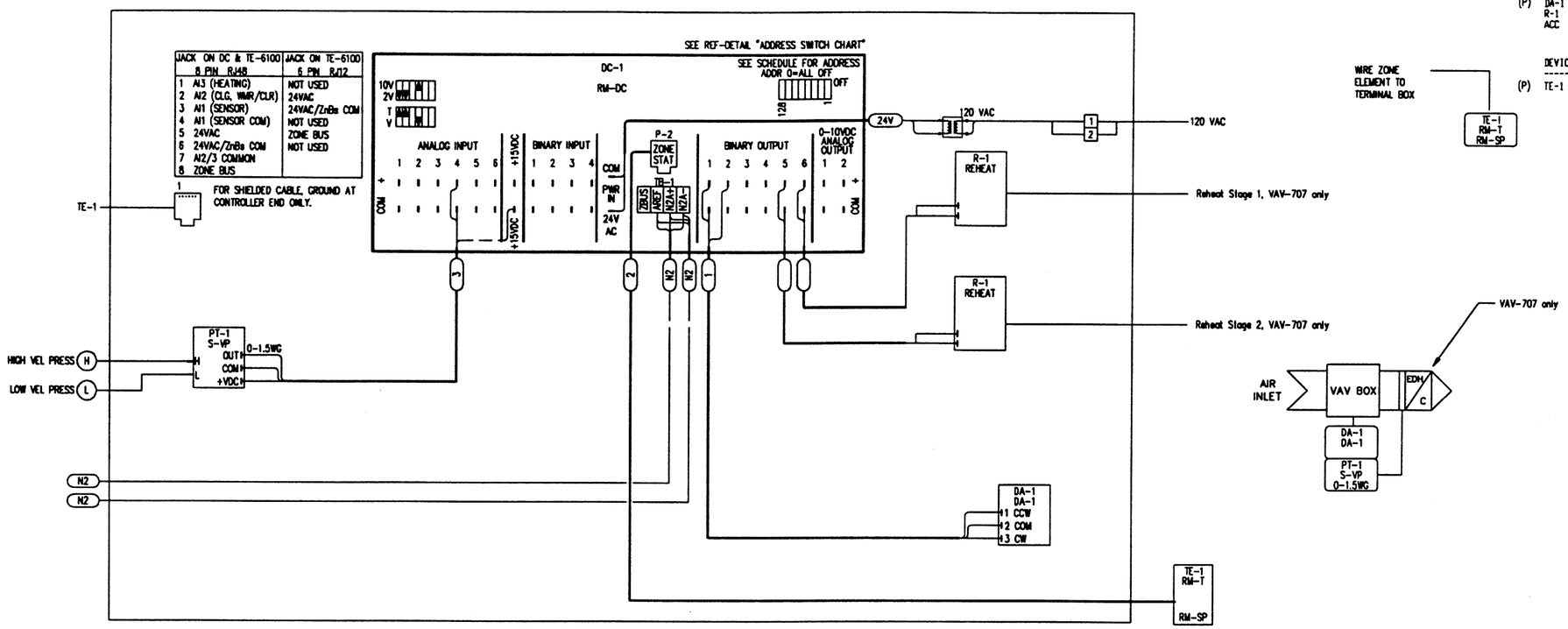

PANEL MATERIAL

	DEVICE TAG	QTY	CODE NUMBER	DESCRIPTION
(P)	DC-1	8	AS-VAV101-0	DIGITAL ASC VAV CONTROLLER
(P)	DA-1	8	ATP-2040-12	ACTUATOR/TRANSMITTER PACKAGE
	R-1	2	RH4(24VAC)	CONTROL RELAY-IDEX
	ACC	2	RH4B	CONTROL RELAY BASE-IDEX

FIELD MATERIAL

	DEVICE TAG	QTY	CODE NUMBER	DESCRIPTION
(P)	TE-1	8	TE-6411S-1010	WALL MOUNTED NI TEMP ELEMENT W/SP ADJ.

Enclosure/Room Schedule

VAV BOX SCHEDULE

VAV TAG	ROOM NAME NUMBER	HTG MIN	HTG MAX	CLG MIN	CLG MAX	REHEAT
VAV-703	CORRIDOR, C201	800	800	800	800	N
VAV-704	CONTROL ROOM, C201	280	280	280	280	N
VAV-705	COMPUTER ROOM, C213	240	240	240	240	N
VAV-706	CORRIDOR, C016	220	220	220	1100	N
VAV-707	CORRIDOR, 2ND FLOOR	50	200	50	200	Y
VAV-708	CORRIDOR, B204	20	20	20	100	N
VAV-712	CORRIDORS,C002,3,4	116	116	116	580	N

Sequence of Operations

OCCUPIED MODE:

THE DIGITAL CONTROLLER WILL MODULATE VAV TERMINAL UNIT DAMPER, DA-1 TO MAINTAIN A FLOW SETPOINT ACCORDING TO THE ASC CONFIGURATION FILE INDICATED ON THE ENCLOSURE/ROOM SCHEDULE. THE FLOW SETPOINT WILL BE CALCULATED TO MAINTAIN OCCUPIED HEATING/COOLING MINIMUM AND MAXIMUM FLOW RATES AS THE SPACE TEMPERATURE TRAVELS THROUGH THE HEATING AND COOLING PROPORTIONAL BANDS. THE CONTROLLER WILL PROVIDE A PROPROTIONAL PNEUMATIC OUTPUT TO MODULATE ZONE HEATING COIL CONTROL VALVE, V-X INSIDE THE HEATING PROPORTIONAL BAND. BOTH CONTROLLED DEVICES, DA-1 AND V-X WILL BE MODULATED IN SEQUENCE TO MAINTAIN AN ACTUAL HEATING/COOLING SETPOINT. THE ACTUAL TEMPERATURE SETPOINT CAN BE ADJUSTED PLUS OR MINUS 5 F. FROM THE BASE SETPOINT, 72 F. AT TEMPERATURE ELEMENT, TE-1. THE BASE SETPOINT CAN BE ADJUSTED FROM ANY ICS OPERATOR WORKSTATION.

UNOCCUPIED MODE:

THE ZONE MAY BE PLACED IN A TEMPORARY OCCUPANCY MODE BY ACTIVATING BI-5 FROM THE ICS WORKSTATION, OWS-1. THE DIGITAL CONTROLLER WILL MODULATE VAV TERMINAL UNIT DAMPER, DA-1 TO MAINTAIN A FLOW SETPOINT ACCORDING TO THE CONFIGURATION FILE. THE FLOW SETPOINT WILL BE CALCULATED TO MAINTAIN UNOCCUPIED HEATING/COOLING MINIMUM AND MAXIMUM FLOW RATES AS THE SPACE TEMPERATURE TRAVELS THROUGH THE HEATING AND COOLING PROPORTIONAL BANDS. BOTH CONTROLLED DEVICES, DA-1 AND V-X WILL BE MODULATED IN SEQUENCE TO MAINTAIN AN UNOCCUPIED SPACE TEMPERATURE SETPOINT AS DEFINED IN THE ASC CONFIGURATION FILE. THE UNOCCUPIED TEMPERATURE SETPOINT IS ADJUSTABLE FROM ANY ICS OPERATOR WORKSTATION.

COPYRIGHT JOHNSON CONTROLS, INC.1993

FILE: 701_PA
DCODE: 19930607.1002

DRAWING TITLE
Primary Air Only
Variable Air Volume Terminal
Units

NO.	REVISION-LOCATION	ECN	DATE	BY
	RECORD		06/08/94	SF
4	CC REVISONS	6	03/31/93	SF

REFERENCE DRAWING			
SALES ENGR	PROJECT MGR	APPL. ENGR	DRAWN
JP	SF	DCS	BY SF DATE 02/11/92

APPROVED BY DATE

PROJECT
The Argonne National Labs
Advanced Photon Source Campus
9700 Cass Avenue South
Argonne, IL 60439

JOHNSON CONTROLS
Systems & Services Division
3007 MALMO ROAD
ARLINGTON HEIGHTS
ILLINOIS 60005
708/364-1500 Main
708/808-4438 Eng

CONTRACT NUMBER 91390-0009
DRAWING NUMBER 91-9-C-05C