Enclosure, EN-10104, Digital ASC for HV-301

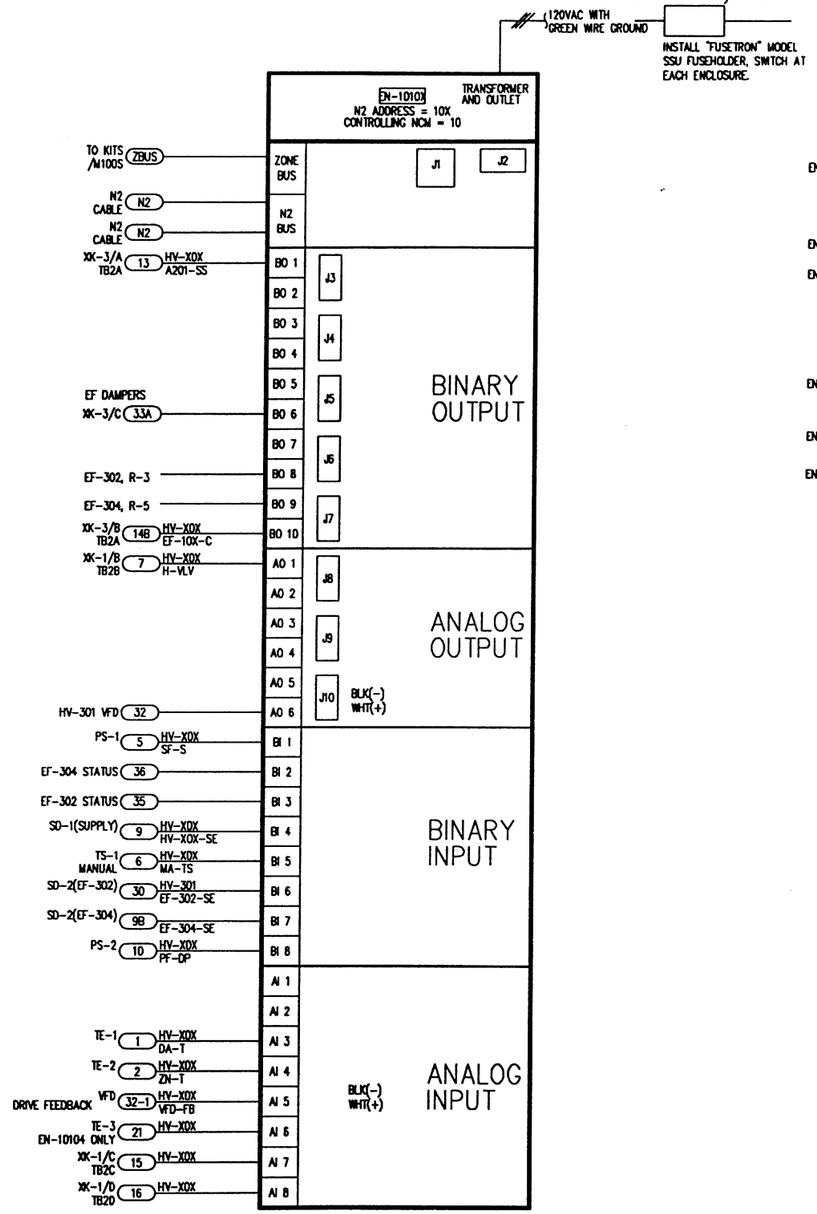

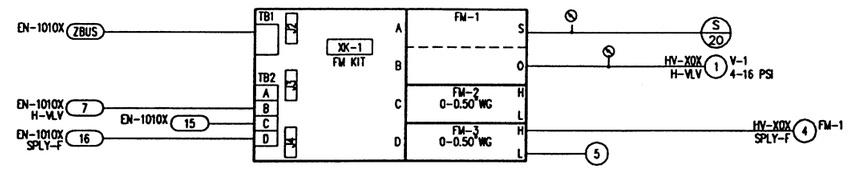

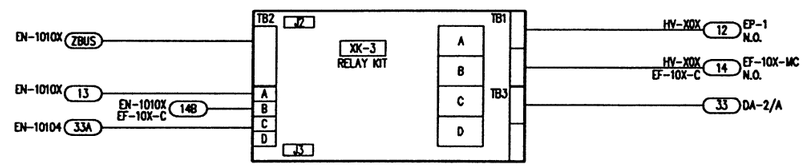

WIRE THESE CABLES FROM ICS ENCLOSURE TO SMOKE DETECTOR, SD-2 THEN PIPE UP TO EXHAUST FAN DAMPER.

FIELD VERIFY CABLE NUMBERS

PANEL MATERIAL

DEVICE TAG	QTY	CODE NUMBER	DESCRIPTION
EN-1010X	1	AS-AHU101-0	AIR HANDLING UNIT ENC/TER
	1	AS-AHU102-0	AIR HANDLING UNIT LOGIC B
	1	AS-XFR100-0	100VA TRANSFORMER KIT
	1	EN-ENC200-0	ENCLOSURE
FM-1	1	FM-DAP102-0	DAP MANUAL MODULE
	1	FM-DAP103-0	E/P OUT FM FOR ASC
FM-2-FM-3	2	FM-IDP050-0	1/2 IN WG DIFF PRESS TRANSMITTER FM
XK-1	1	AS-FMK100-0	FUNCTION MOD KIT-4 SLOTS
XK-3	1	AS-RLY100-0	LINE VOLTAGE RELAY KIT
ACC	2	G-2010-5	0-30 PSI, 1 1/2 INCH PRESSURE GAUGE

COPYRIGHT JOHNSON CONTROLS, INC.1993

FILE: EN-104

DRAWING TITLE
ENCLOSURE, EN-10104
DIGITAL ASC, AHU100 SERVING
HV-301

REFERENCE DRAWING		NO.	REVISION-LOCATION	ECN	DATE	BY
			RECORD		02/21/95	SF

SALES ENGR	PROJECT MGR	APPL. ENGR	DRAWN		APPROVED	
JP	SF	DCS	BY SF	DATE 04/30/94	BY	DATE

PROJECT
The Argonne National Labs
Advanced Photon Source Campus
9700 Cass Avenue South
Argonne, IL 60439

JOHNSON CONTROLS
Systems & Services Division

3007 MALMO ROAD
ARLINGTON HEIGHTS
ILLINOIS 60005
708/364-1500 Main
708/806-4438 Eng

CONTRACT NUMBER 91390-0009

DRAWING NUMBER 91-9-B-03D