Enclosure, EN-10101 AND EN-10108, Digital ASC for HV-101 and HV-201

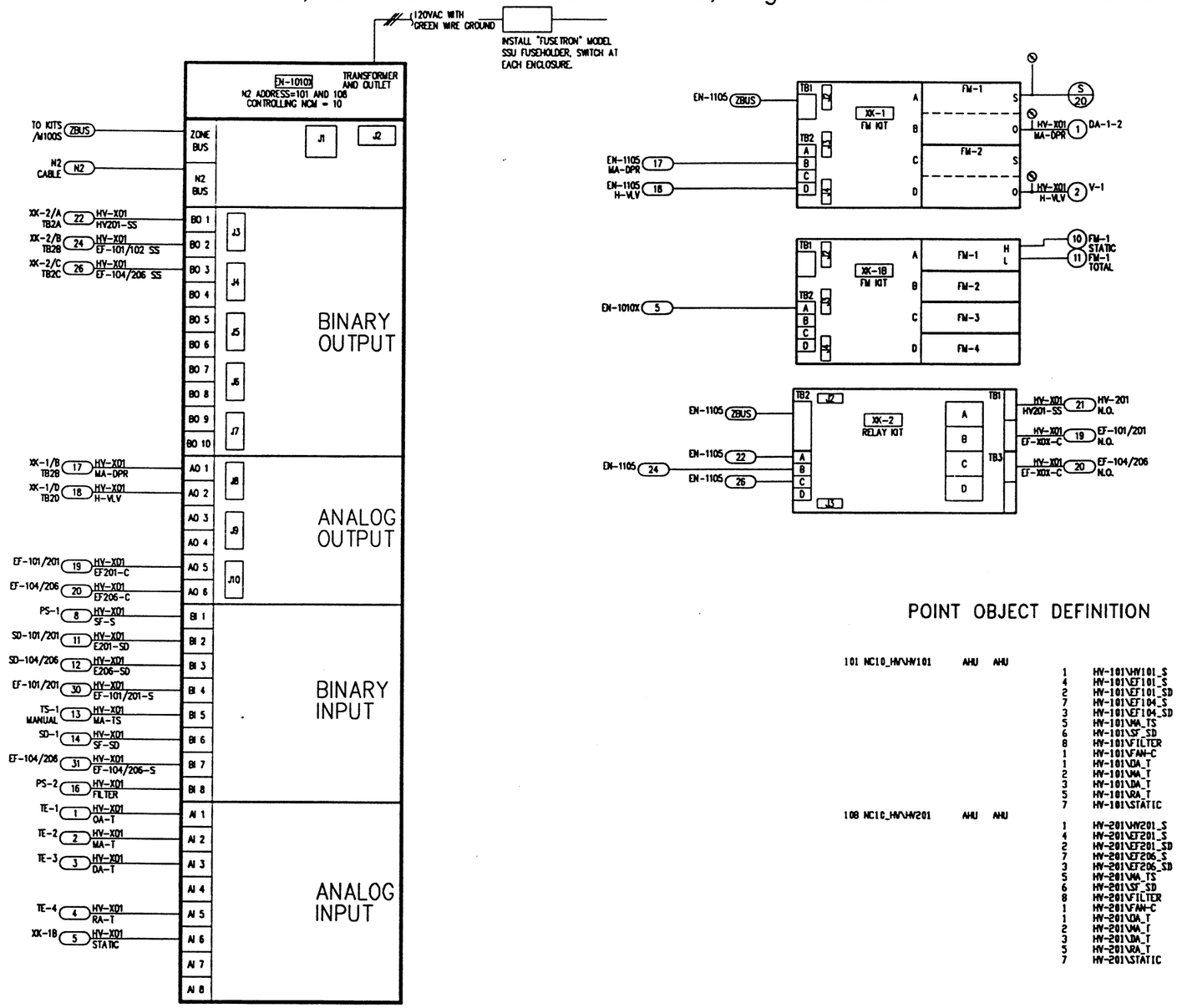

POINT OBJECT DEFINITION

```
101 NC10_HV\HV101      AHU   AHU
                              1    HV-101\HV101_S     BI
                              4    HV-101\EF101_S     BI
                              2    HV-101\EF101_SD    BI
                              7    HV-101\EF104_S     BI
                              3    HV-101\EF104_SD    BI
                              5    HV-101\MA_TS       BI
                              6    HV-101\SF_SD       BI
                              8    HV-101\FILTER      BI
                              1    HV-101\FAN-C       BO
                              1    HV-101\OA_T        AI
                              2    HV-101\MA_T        AI
                              3    HV-101\DA_T        AI
                              5    HV-101\RA_T        AI
                              7    HV-101\STATIC      AI
108 NC10_HV\HV201      AHU   AHU
                              1    HV-201\HV201_S     BI
                              4    HV-201\EF201_S     BI
                              2    HV-201\EF201_SD    BI
                              7    HV-201\EF206_S     BI
                              3    HV-201\EF206_SD    BI
                              5    HV-201\MA_TS       BI
                              6    HV-201\SF_SD       BI
                              8    HV-201\FILTER      BI
                              1    HV-201\FAN-C       BO
                              1    HV-201\OA_T        AI
                              2    HV-201\MA_T        AI
                              3    HV-201\DA_T        AI
                              5    HV-201\RA_T        AI
                              7    HV-201\STATIC      AI
```

PANEL MATERIAL

	DEVICE TAG	QTY	CODE NUMBER	DESCRIPTION
(P)	EN-1010X	2	AS-AHU101-0	AIR HANDLING UNIT ENC/TER
		2	AS-XFR100-0	100VA TRANSFORMER KIT
		2	EN-ECX200-0	
(P)	FN-1-FN-2	4	FN-DAP102-0	DAP MANUAL MODULE
		4	FN-DAP103-0	E/P OUT FM FOR ASC
(P)	XK-1-XK-1B	4	AS-FMK100-0	FUNCTION MOD KIT-4 SLOTS
(P)	XK-2	2	AS-RLY100-0	LINE VOLTAGE RELAY KIT
(P)	FN-1	2	FN-IDPB001-0	-.1 TO +.1 IN WG FM
(P)	FN-2-FN-4	6	FN-KIT127-0	FM BLANK OFF
(P)	ACC	6	G-2010-5	GAUGE

NOTES:

1. ALL MATERIAL WITH (P) PRECEEDING THE DEVICE TAG IN THE BILL OF MATERIAL IS PROPRIETARY AND IS BEING SUPPLIED BY JOHNSON CONTROLS, INC. ALL OTHER MATERIAL IS NON-PROPRIETARY.

COPYRIGHT JOHNSON CONTROLS, INC.1993

DRAWING TITLE
Heating/Ventilating Unit, HV-101/201, Mixed Air Single Path Linac/Inj and Klystron Gallary

REFERENCE DRAWING	NO.	REVISION-LOCATION	ECN	DATE	BY
		RECORD		06/08/94	SF
	3	STATIC CTRL		09/02/92	SF

SALES ENGR	PROJECT MGR	APPL. ENGR	DRAWN		APPROVED	
JP	SF	DCS	BY SF	DATE 12/12/91	BY	DATE

FILE: EN-2

PROJECT
The Argonne National Labs
Advanced Photon Source Campus
9700 Cass Avenue South
Argonne, IL 60439

JOHNSON CONTROLS
Systems & Services Division

3007 MALMO ROAD
ARLINGTON HEIGHTS
ILLINOIS 60005
708/364-1500 Main
708/806-4438 Eng

CONTRACT NUMBER 91390-0009

DRAWING NUMBER 91-9-B-04B