EXHAUST FAN CONTROL DIAGRAM

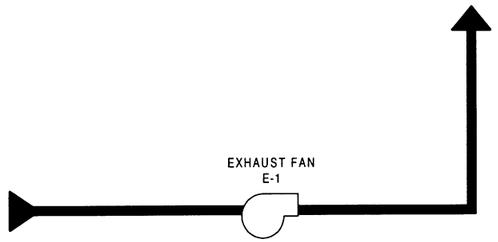

Bill of Material

Desig.	Qty	Part #	Description
Field Devices:			
CR-1	1	H-908	Veris Split Core Current Relay
R-1	1	RH2B120VAC-UL	120VAC DPDT Relay - IDEC
R-1	1	SH2B-05	DPDT Relay Base - IDEC
Panel Devices:			
P-1	1	AS-ENC100-0	General ASC ENC,6.8X7.3X6.9
UNT	1	AS-UNT111-1	UNT6AI,4BI,6BO,2AO,8K
XF-1	1	AS-XFR100-1	Transformer Kit, 120VAC-24VAC, 100VA

WIRING DIAGRAM - UNT10110

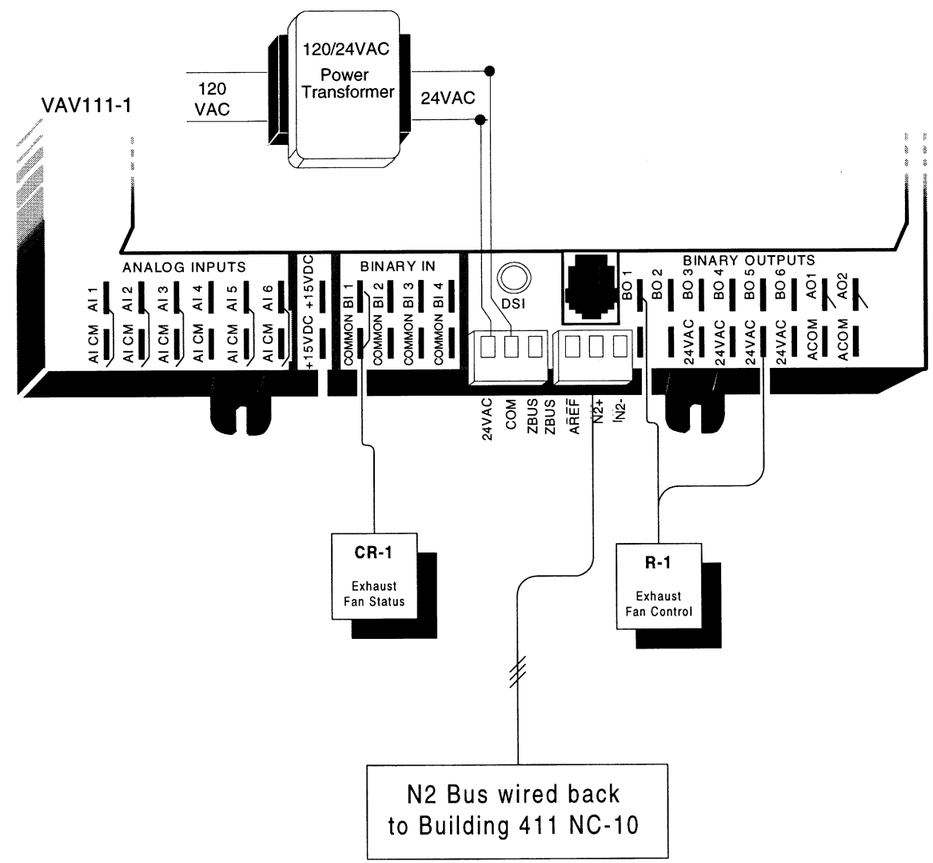

MOTOR STARTER CIRCUIT FOR E-1

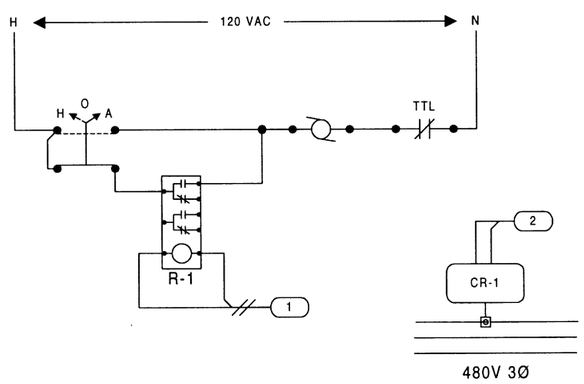

ISSUE	Drawing Title						
NUMBER A	**Exhaust Fan E-1 Control Diagram**		1	As Built		06/2/98	pmw
DATE 06/03/98		REFERENCE DRAWING	NO.	REVISION-LOCATION	ECN	DATE	BY
TIME 11:26 AM	Project Title	Sales Engineer J.P. / Project Manager D.S. / Application Engineer D.C.S.	DRAWN BY B.L. DATE 3/20/97	APPROVED BY AAA DATE MM/DD/YY			
FILE NAME leutlex3.vsd	**Low Energy Undulator Test Line (Bldg. 413)**	JOHNSON CONTROLS Systems & Services Division	Branch Information: Johnson Controls, Inc. 3007 Malmo Dr. Arlington Hts, IL 60005 (847)364-1500	CONTRACT NUMBER **7010-1001**	DRAWING NUMBER **7010-1001-3**		