Process Water Flow Diagram for Building 420
RF/Extraction West

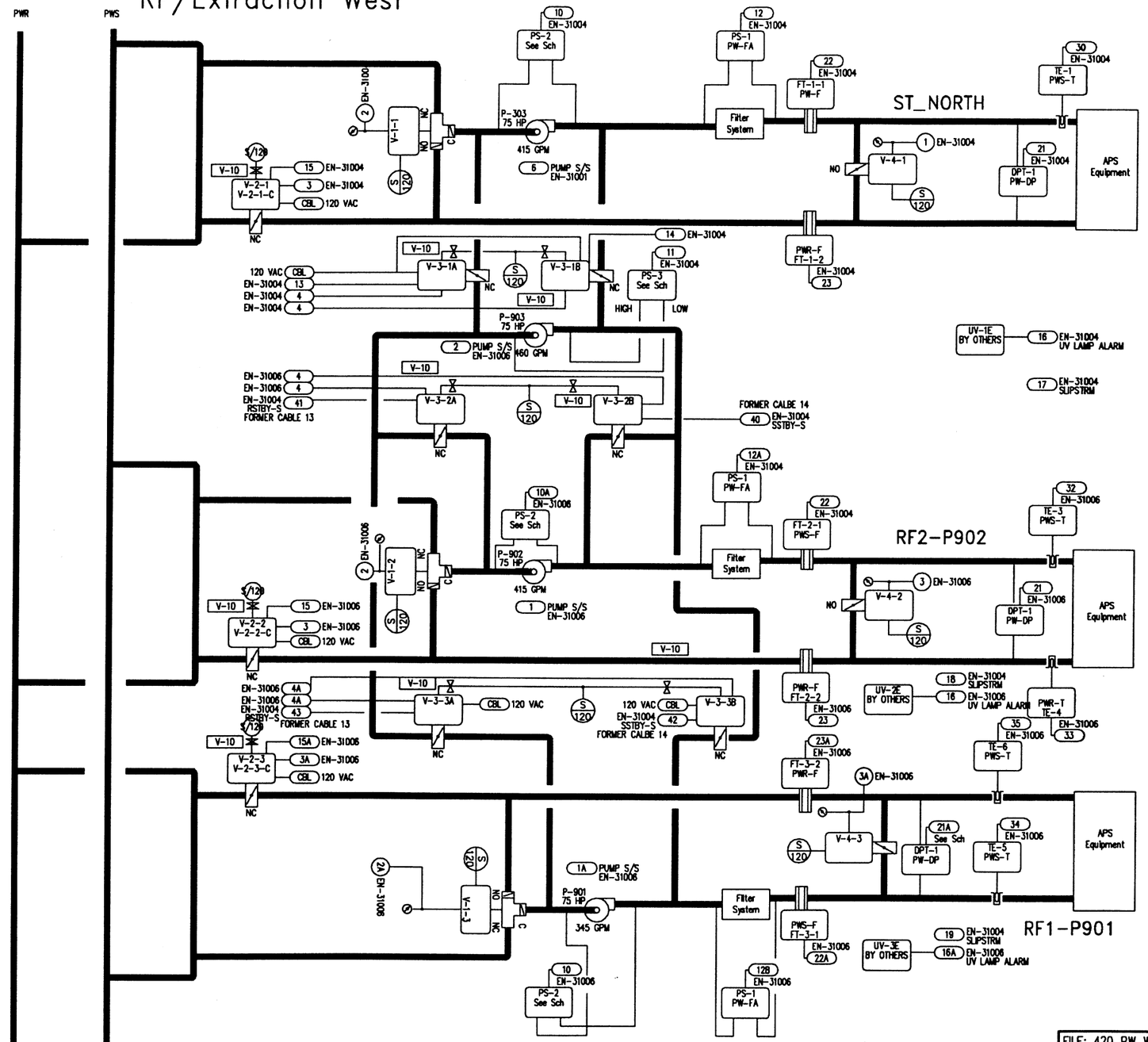

DRAWING TITLE	Building 420, Process Water RF/Extraction West Process Water Control Control Module Hardware
PROJECT	The Argonne National Labs Advanced Photon Source Campus 9700 Cass Avenue South Argonne, IL 60439
REFERENCE DRAWING / NO. / REVISION-LOCATION / ECN / DATE / BY	
SALES ENGR	JP
PROJECT MGR	SF
APPL. ENGR	DCS
DRAWN BY SF DATE 10/19/94	
APPROVED BY DATE	
JOHNSON CONTROLS Systems & Services Division	3007 MALMO ROAD ARLINGTON HEIGHTS ILLINOIS 60005 708/364-1500 Main 708/808-4438 Eng
CONTRACT NUMBER	91390-0009
DRAWING NUMBER	91-9-D-xxx
FILE:	420_PW_W

COPYRIGHT JOHNSON CONTROLS, INC.1993

02A