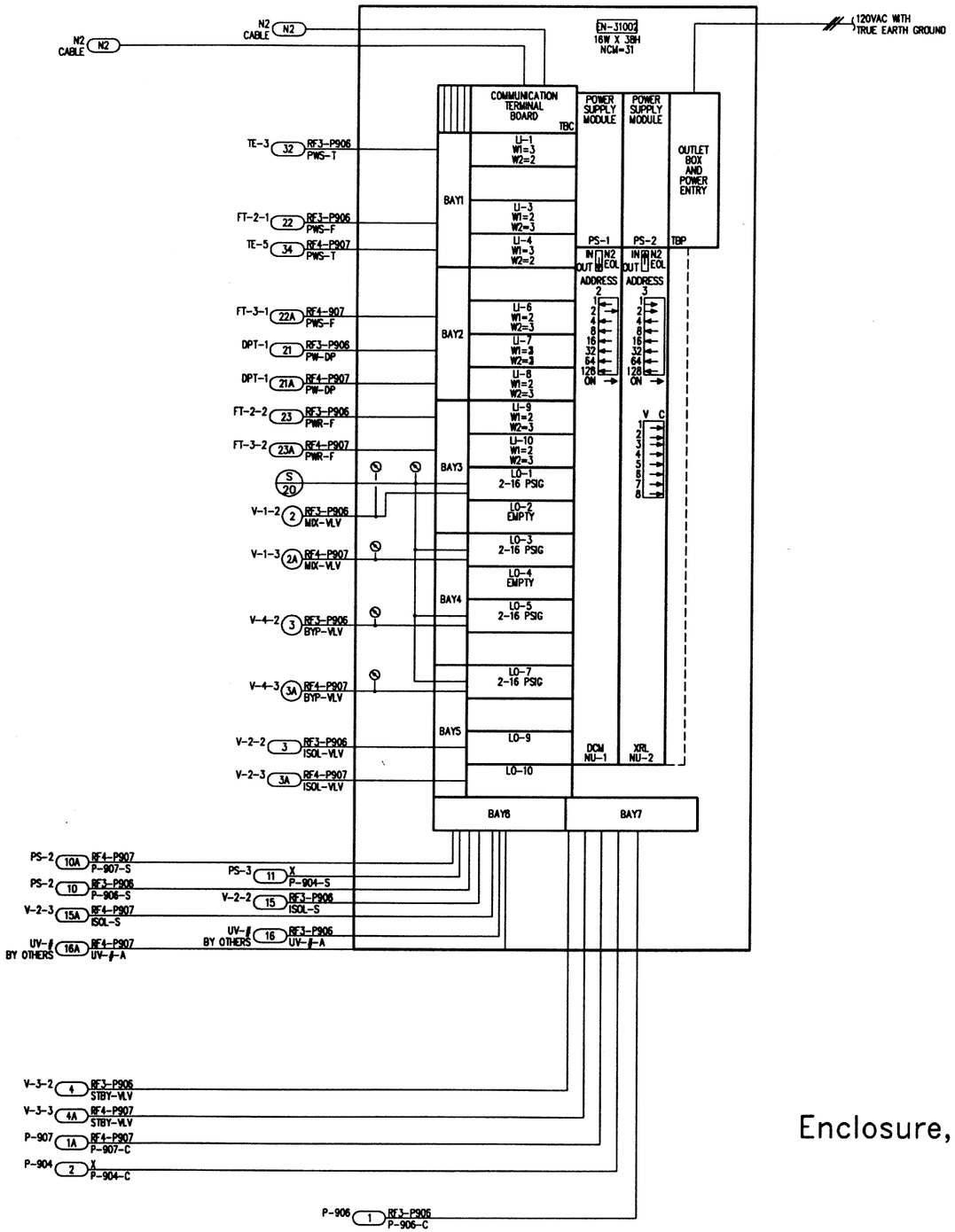

PANEL MATERIAL

DEVICE TAG	QTY	CODE NUMBER	DESCRIPTION
EN-31002	1	EN-BSF201-0	2 SLOT BASE FRAME
	1	EN-EVC200-0	NCU/NEU 16X30 ENCLOSURE
	1	IO-NTU102-0	NETWORK TERMINAL W/LIGHT
	1	IO-NTU114-0	REMOTE LINE DRIVER
LI-1, LI-3-LI-4, LI-6-LI-7, LI-10	6	FM-IUN102-0	UNIVERSAL INPUT FM
LI-7-LI-9	3	FM-IUN101-0	
LO-1,LO-3, LO-5,LO-7	4	FM-DAP121-0	E/P OUTPUT FM F/DCM 1SLOT
LO-2,LO-4	2	FM-KIT127-0	FM BLANKOFFS
LO-9-LO-10	2	FM-DRL101-0	LATCH RELAY OUTPUT FM
NU-1	1	NU-DCM140-0	DIGITAL CONTROL MODULE
NU-2	1	NU-XRL101-0	XM-8/OUT LATCH B/INP
PS-1-PS-2	2	NU-PWR101-0	POWER SUPPLY

Enclosure, EN-31002, NEU Serving Building 420
Process Water(RF-EXT-East)

COPYRIGHT JOHNSON CONTROLS, INC.1993

FILE: EN-31002

DRAWING TITLE
Enclosure, EN-31002
NEU Serving Building 420
Process Water, RF/EXT-East

REFERENCE DRAWING	NO.	REVISION-LOCATION	ECN	DATE	BY

SALES ENGR	PROJECT MGR	APPL. ENGR	DRAWN			APPROVED	
JP	SF	DCS	BY SF	DATE 11/19/94	BY	DATE	

PROJECT
The Argonne National Labs
Advanced Photon Source Campus
9700 Cass Avenue South
Argonne, IL 60439

JOHNSON CONTROLS
Systems & Services Division

3007 MALMO ROAD
ARLINGTON HEIGHTS
ILLINOIS 60005
708/364-1500 Main
708/808-4438 Eng

CONTRACT NUMBER
91390-0009

DRAWING NUMBER
91-9-D-~~XXX~~ 02E