Exhaust Fans, EF-901-903 and 907-908 Flow Diagram and Equipment Locations

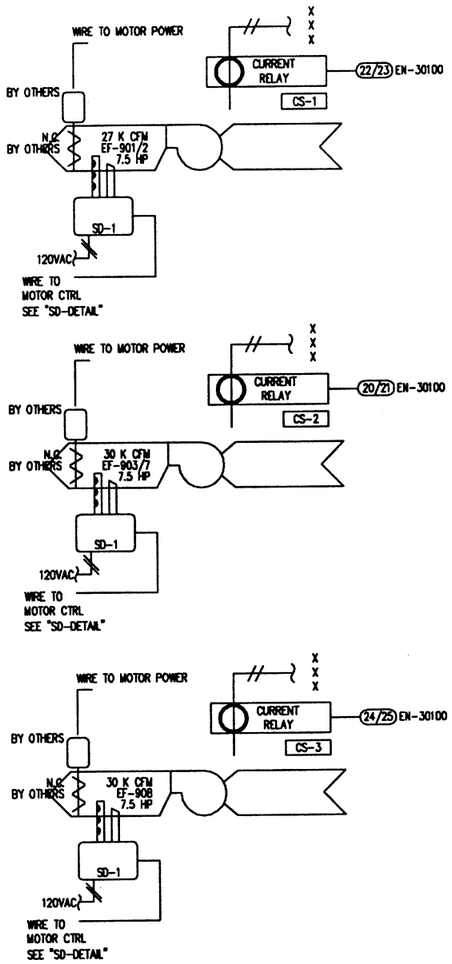

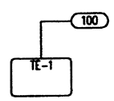

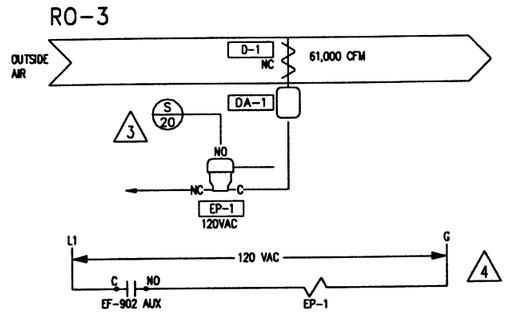

INTERLOCKED W/EF-902

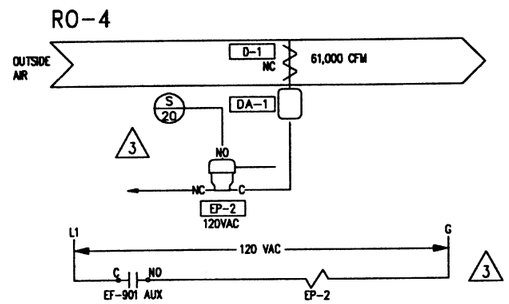

INTERLOCKED W/EF-901

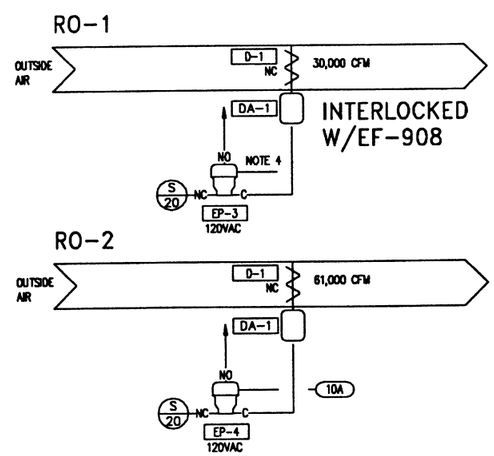

INTERLOCKED W/EF-908

ANY MATERIAL WITH A (P) PRECEEDING THE DEVICE TAG IS CONSIDERED PROPRIETARY EQUIPMENT AND IS BEING SUPPLIED BY JOHNSON CONTROLS, INC. ALL OTHER MATERIAL IS NON-PROPRIETARY EQUIPMENT.

Motor Control

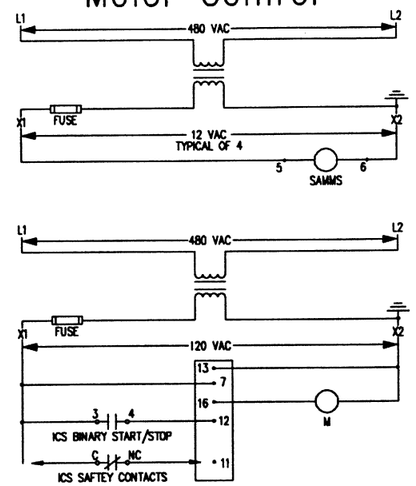

LEADER LINE INDICATES POSSIBLE FUTURE CONECTION FOR SAFETY CONTACTS.

FIELD MATERIAL

DEVICE TAG	QTY	CODE NUMBER	DESCRIPTION
D-1	4	---	SEE DAMPER SCHEDULE
DA-1	4	----	PNEU ACTUATOR SEE DAMPER SCH
PS-4	1	P47GA-12C	STEAM PRESSURE CONTROL
PS-5-PS-6	2	P47GA-9C	STEAM PRESSURE CONTROL
SD-1	6	DH1851AC-2	DUCT DETECTOR, ION,
	6	ST-10	SAMPLING TUBE FOR
	6	RTS-451	RESET/TEST
TE-1	1	TE-6000-100	SENSOR, 1000 OHM +/- .1%
	1	T-4000-2139	COVER PLAS HRZ CONC NO-T
	1	TE-6001-4	ELEMENT HOLDER F/TE &
CS-1-3	6	705-NO	CURRENT SWITCH

PANEL MATERIAL

DEVICE TAG	QTY	CODE NUMBER	DESCRIPTION
DC-1	1	AS-UNT110-0	UNITART C W/O ENC 8BO&OAD
	1	AS-ENC100-0	GENERIC ENCLOSURE KIT
	1	Y65AR-1C	TRANSFORMER
EP-1-EP-4	4	V-2410-2	VALVE, SOL. AIR, 3-WAY

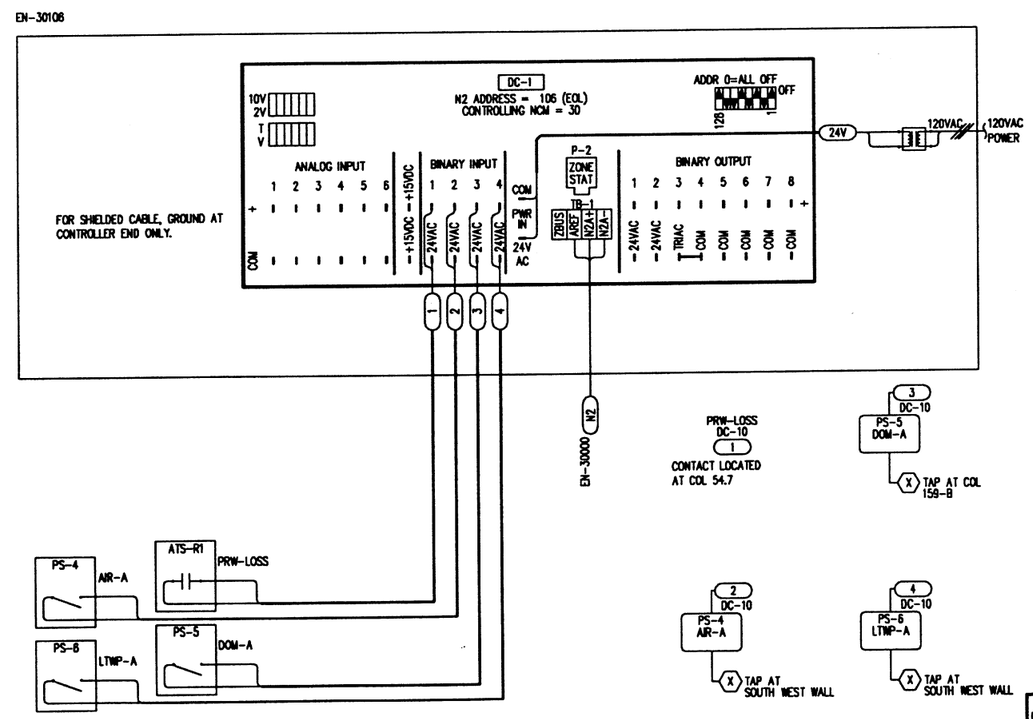

Sequence Of Operations

The digital controller, EN-30100 will cycle exhaust fans, EF-901-EF-903 and-EF-907-EF-908. in the following sequence sequence to maintain a space temperature of 75 F.(Adj on ICS terminal.)

1. RO-2
2. EF-901, Interlocked with RO-4
3. EF-907 AND EF-908, Interlocked with RO-1
4. EF-903 AND EF-902, Interlocked with RO-3

In the event that smoke is detected in the discharge of any exhaust fan smoke detectors, SD-1 will stop that exhaust fan and issue an alarm to the ICS network.

Fan status is an binary input object accessable from the ICS network.

NOTES:

1. SEE DRAWING 91-9-D-04A FOR SMOKE DETECTOR DETAIL.
2. DELETED
3. DELETED
4. WIRE AUX CONTACTS FOR EF-908 TO ACTIVATE EP-3 FROM A 120 VAC SOURCE.
5. WIRE AUTO SIDE OF EF-908 INTO THE N.O. AUX CONTACT OF EF-907.
6. WIRE AUTO SIDE OF EF-902 INTO THE N.O. AUX CONTACT OF EF-903.

COPYRIGHT JOHNSON CONTROLS, INC.1993

DRAWING TITLE
Exhaust Fans
EF-907 and EF-902/903
Relief Openings
RO-3 and RO-4

REFERENCE DRAWING	NO.	REVISION-LOCATION	ECN	DATE	BY
	4	REVISE INTERLOCK		07/10/93	SF
	3	CTRL - EF-902/8		07/01/93	SF
	2	GENERAL		12/16/92	SF

SALES ENGR	PROJECT MGR	APPL. ENGR	DRAWN		APPROVED	
JP	SF	DCS	BY SF	DATE 02/21/91	BY	DATE

FILE: V-901
DCODE: 199307/09.1828

PROJECT
The Argonne National Labs
Advanced Photon Source Campus
9700 Cass Avenue South
Argonne, IL 60439

JOHNSON CONTROLS
Systems & Services Division
3007 MALMO ROAD
ARLINGTON HEIGHTS
ILLINOIS 60005
708/364-1500 Main
708/808-4438 Eng

CONTRACT NUMBER
91390-0009

DRAWING NUMBER
91-9-D-05A