Enclosure, EN-6010X, Digital ASC for AHU-100X

TYPICAL FOR BUILDINGS 431-438

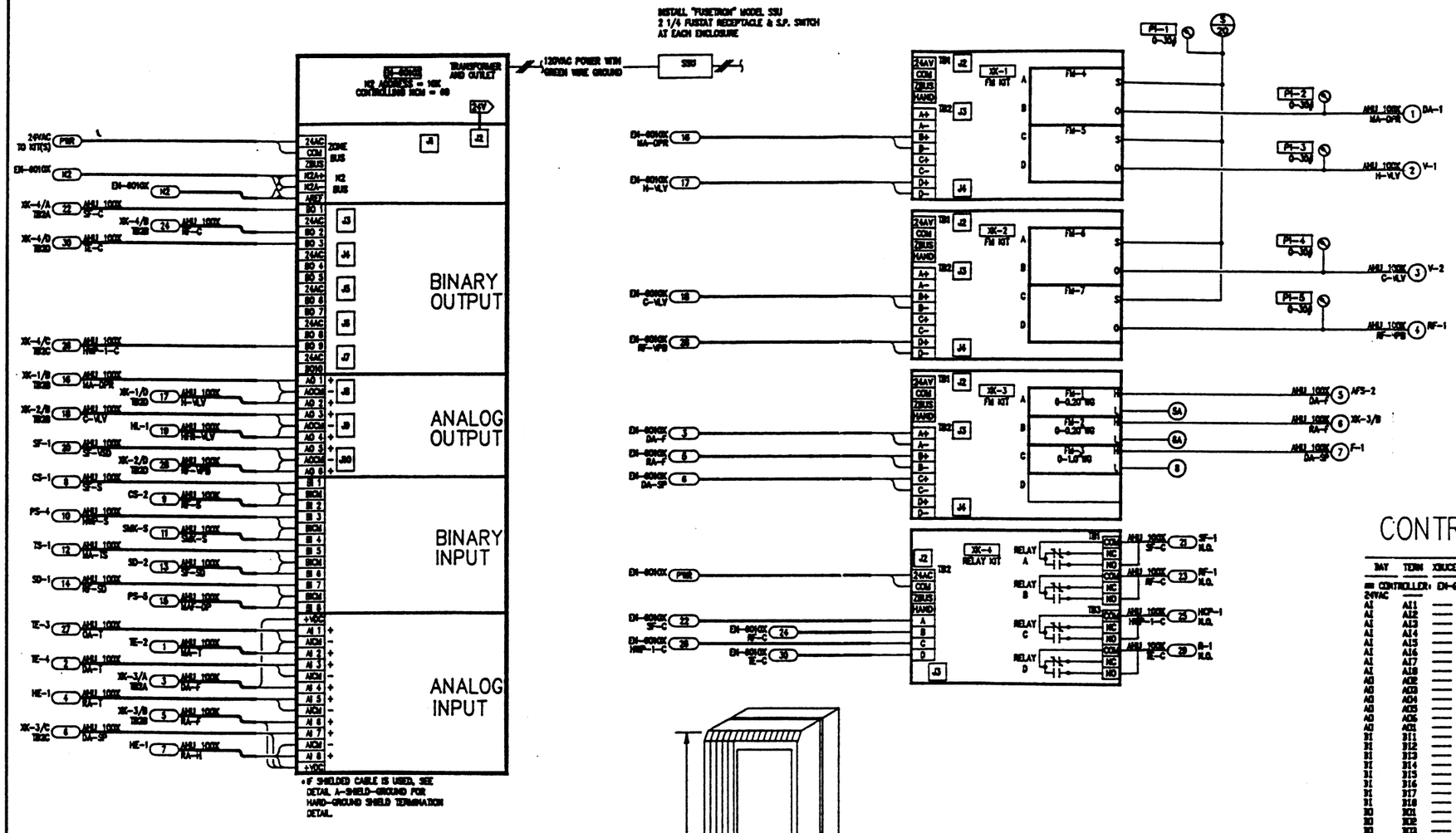

PANEL MATERIAL

	DEVICE TAG	QTY	CODE NUMBER	DESCRIPTION
(P)	EN-6010X	8	AS-AHU101-0	AIR HANDLING UNIT ENC/TER
		8	AS-AHU102-0	AIR HANDLING UNIT LOGIC 3
		8	AS-XFX100-1	100VA TRANSFORMER KIT
(P)	FM-1-FM-2	16	FM-IDP002-0	DIFF PRESS INPUT FM .2 IN
		16	FM-PCM101-0	PNEU.CONN.MOD.
(P)	FM-3	8	FM-IDP010-0	DIFF PRESS INPUT FM 1. IN
		8	FM-PCM101-0	PNEU.CONN.MOD.
(P)	FM-4-FM-7	32	FM-DAP102-0	DAP MANUAL MODULE
		32	FM-DAP103-0	C/P OUT FM FOR ASC
(P)	P-1	8	EN-CWC200-0	MCU/MCU 16X20 ENCLOSURE
(P)	PI-1-PI-5	40	G-2010-101	GAGE 2" 0-300/0-2000PA
(P)	XK-1-XK-3	24	AS-FMK100-0	FUNCTION MOD KIT-4 SLOTS
(P)	XK-4	8	AS-RLT100-0	LINE VOLTAGE RELAY KIT
	SSU	8	SSU	FUSETRON 2 1/4 FUSTAT RECEPTACLE AND SINGLE POLE SWITCH

NOTES:
1. ALL MATERIAL WITH (P) PRECEDING THE DEVICE TAG IN THE BILL OF MATERIAL IS PROPRIETARY AND IS BEING SUPPLIED BY JOHNSON CONTROLS, INC. ALL OTHER MATERIAL IS NON-PROPRIETRY.

NOTE:
BASE JOB EQUALS QUANTITIES IN THE BILL OF MATERIALS DIVIDED BY TWO. ALTERNATE IS THE QUANTITY AS PRINTED IN THE BILL OF MATERIALS.

BASE JOB IS BUILDINGS 431, 432, 434, 435

CONTROL SYSTEM TERMINATION

BAY	TERM	XDUCER	DEVICE	SYSTEM	OBJECT	EXPANDED ID	REFERENCE DETAIL
** CONTROLLER: EN-6010X							
24VAC		—	XK-4				—
AI	AI1	—	TE-3	AHU_100X	DA-T	OUTDOOR AIR TEMPERATURE	A-RTD-2TV1ST-G
AI	AI2	—	TE-2	AHU_100X	MA-T	MIXED AIR TEMPERATURE	A-RTD-2TV1ST-E
AI	AI3	—	TE-4	AHU_100X	RA-T	DISCHARGE AIR TEMPERATUR	A-RTD-2TV1ST-G
AI	AI4	—	XK-3/A	AHU_100X	DA-F	DISCHARGE AIR FLOW	—
AI	AI5	—	HE-1	AHU_100X	RA-T	RETURN AIR TEMPERATURE	A-RTD-2TV1ST-G
AI	AI6	—	XK-3/B	AHU_100X	RA-F	RETURN AIR FLOW	—
AI	AI7	—	XK-3/C	AHU_100X	DA-SP	DISCHARGE STATIC PRESSUR	—
AI	AI8	—	HE-1	AHU_100X	RA-H	RETURN AIR HUMIDITY	A-HA-IN-P-2TV1ST-E
AO	AO2	—	XK-1/B	AHU_100X	H-VLV	HEATING COIL VALVE	—
AO	AO3	—	XK-2/B	AHU_100X	C-VLV	COOLING COIL VALVE	—
AO	AO4	—	H-1	AHU_100X	HFR-VLV	HUMIDIFIER VALVE	A-HA-OUTP-2TV1ST-E
AO	AO5	—	SF-1	AHU_100X	SF-VSD	SUPPLY FAN VAR SPEED DRV	A-HA-OUTP-2TV1ST-G
AO	AO6	—	XK-2/B	AHU_100X	RF-VFD	RETURN FAN VANE PIT BLD	—
AO	AO1	—	XK-1/B	AHU_100X	MA-DPR	MIXED AIR DAMPERS	—
BI	BI1	—	CS-1	AHU_100X	SF-S	SUPPLY FAN STATUS	A-BIN-2TV1ST-D-H
BI	BI2	—	CS-2	AHU_100X	RF-S	RETURN FAN STATUS	A-BIN-2TV1ST-E-H
BI	BI3	—	PS-4	AHU_100X	HWP-S	HOT WATER PUMP P-X STATU	A-BIN-2TV1ST-D-H
BI	BI4	—	SMK-S	AHU_100X	SMK-S	SMOKE CONTACT STATUS	A-BIN-2TV1ST-E-H
BI	BI5	—	TS-1	AHU_100X	MA-TS	MIXED AIR TEMP SWITCH	A-BIN-2TV1ST-D-H
BI	BI6	—	SD-2	AHU_100X	SF-SD	SUPPLY FAN SMOKE DETECT	A-BIN-2TV1ST-E-H
BI	BI7	—	SD-1	AHU_100X	RF-SD	RETURN FAN SMOKE DETECT	A-BIN-2TV1ST-D-H
BI	BI8	—	PS-5	AHU_100X	HWF-DP	MIXED AIR FLOW DIFF PRES	A-BIN-2TV1ST-E-H
BO	BO1	—	XK-4/A	AHU_100X	SF-C	SUPPLY FAN CONTROL	—
BO	BO2	—	XK-4/B	AHU_100X	RF-C	RETURN FAN CONTROL	—
BO	BO3	—	XK-4/D	AHU_100X	TE-C	TOILET EXHAUST CONTROL	—
BO	BO9	—	XK-4/C	AHU_100X	HWP-1-C	HOT WATER PUMP CONTROL	—
MODBUS	IN		EN-6010X				A-MB-3SHLD-3SHLD
MODBUS	OUT		EN-6010X				A-MB-3SHLD-3SHLD
X-FMR	120VA		120VAC				A-ENC-POWER

COPYRIGHT JOHNSON CONTROLS, INC. 1993

DRAWING TITLE
ENCLOSURE EN-6010X
AHU

REFERENCE DRAWING	NO.	REVISION-LOCATION	ECN	DATE	BY
	1	GENERAL		07/08/96	DCS

SALES ENGR	PROJECT MGR	APPL. ENGR	DRAWN	APPROVED
JP	SF	PCS	BY DCS DATE 06/22/93	BY DATE

PROJECT
The Argonne National Labs
Advanced Photon Source Campus
9700 Cass Avenue South
Argonne, IL 60439

JOHNSON CONTROLS
Systems & Services Division
3007 WALNUT ROAD
ARLINGTON HEIGHTS
ILLINOIS 60005
708/364-1500 Main
708/806-4438 Eng

CONTRACT NUMBER 91390-0009
DRAWING NUMBER 91-9-F-01B