Flow Diagram and Equipment Locations For LAB/OFFICE MODULES Heating Water Bridges

TYPICAL FOR BUILDINGS 431–438

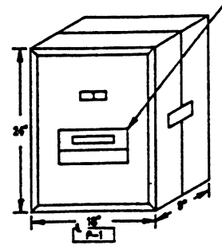

Mounting Schedule

Item	Device Tag	Mounting Description
1	P-1	ARGONNE NATIONAL LABS BUILDING 431 HTG WATER LTW-THS
2	P-2	ARGONNE NATIONAL LABS BUILDING 432 HTG WATER LTW-THS
3	P-3	ARGONNE NATIONAL LABS BUILDING 433 HTG WATER LTW-THS
4	P-4	ARGONNE NATIONAL LABS BUILDING 434 HTG WATER LTW-THS
5	P-5	ARGONNE NATIONAL LABS BUILDING 435 HTG WATER LTW-THS
6	P-6	ARGONNE NATIONAL LABS BUILDING 436 HTG WATER LTW-THS
7	P-7	ARGONNE NATIONAL LABS BUILDING 437 HTG WATER LTW-THS
8	P-8	ARGONNE NATIONAL LABS BUILDING 438 HTG WATER LTW-THS

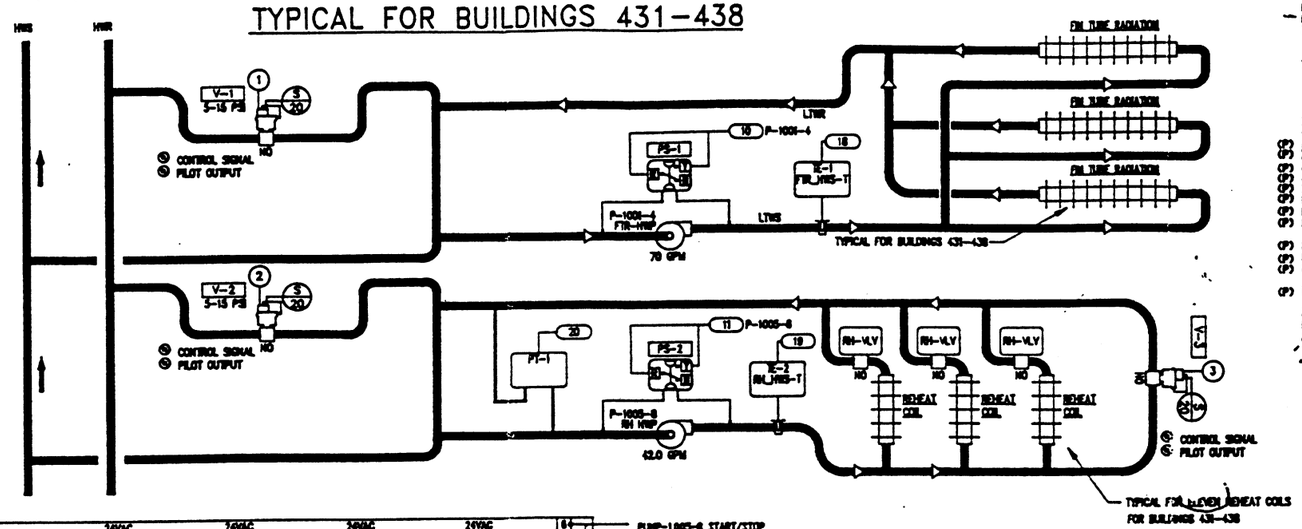

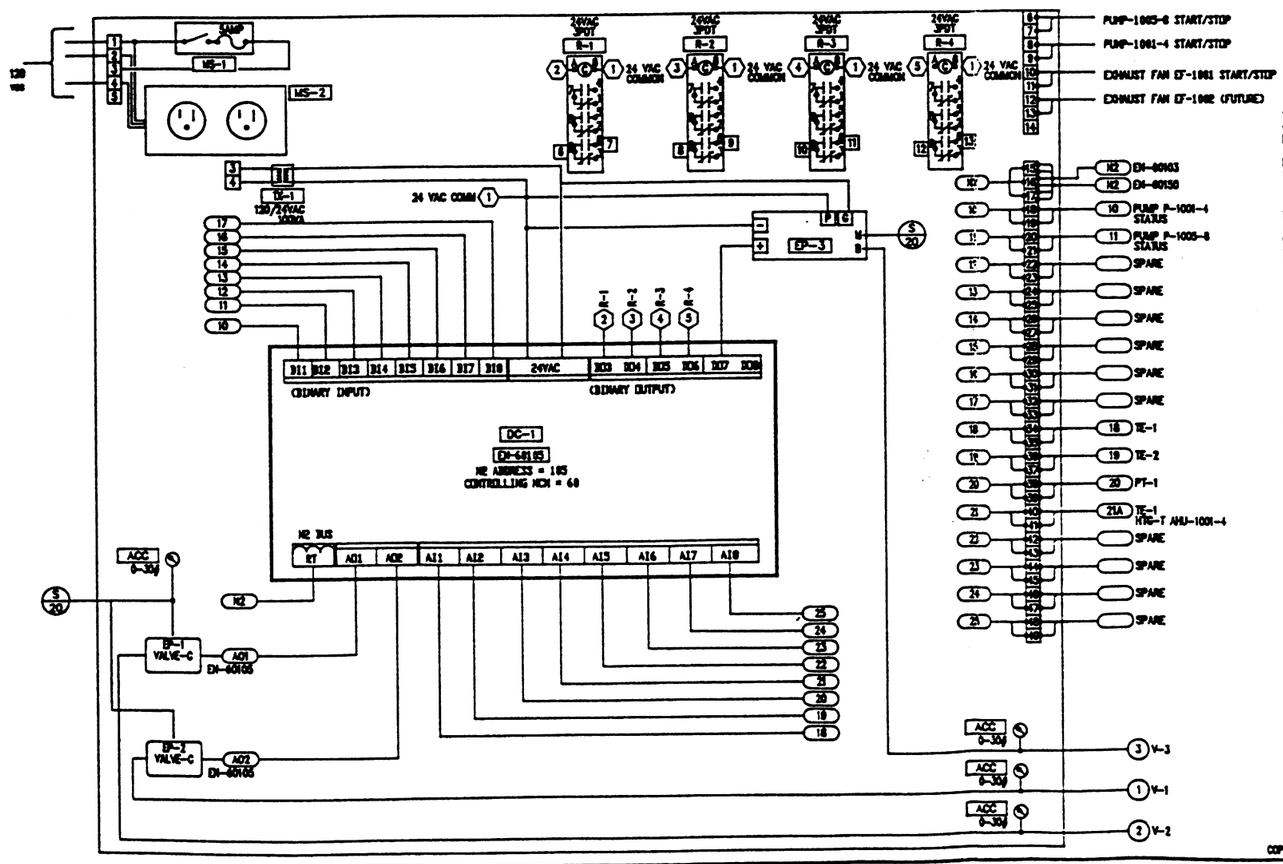

Sequence of Operations

The digital controller, EX-60105 will modulate heating water bridge valve, V-1 through electric/pneumatic transducer, EP-1 to maintain a FTR-LTW heating water setpoint as follows at temperature element, TE-1:

Outdoor Air Temperature	Heating Water Supply Temperature
0 F.(Adj.)	180 F.(Adj.)
50 F.(Adj.)	129 F.(Adj.)

The controller will monitor the status of FTR heating water pumps, P-1001-4 and issue an alarm to the ICS network in the event that status does not match the command. Alarm message: 'FTR-LTW Failure'

The following point objects will be adjustable from the Operator Workstation:

1. FTR-LTW heating water supply temperature, TE-1
2. FTR Heating water reset schedule.

The following point objects will be alarmed and monitored to the ICS.

1. FTR HWS Pumps Status, P-1001-4
2. High FTR heating water supply temperature, TE-1) 248 F.
3. Low FTR heating water supply temperature, TE-1 (180 F.

The digital controller, EX-60105 will modulate heating water bridge valve, V-2 through electric/pneumatic transducer, EP-2 to maintain a RH-LTW heating water setpoint of 180 degrees F at temperature element, TE-1:

The following point objects will be adjustable from the Operator Workstation:

1. RH-LTW heating water supply temperature, TE-2
2. RH Heating water reset schedule.

The following point objects will be alarmed and monitored to the ICS.

1. RH HWS Pumps Status, P-1005-8
2. High RH heating water supply temperature, TE-1) 248 F.
3. Low RH heating water supply temperature, TE-1 (180 F.

NOTE:
BASE JOB EQUALS QUANTITIES IN THE BILL OF MATERIALS DIVIDED BY TWO.
ALTERNATE IS THE QUANTITY AS PRINTED IN THE BILL OF MATERIALS.

BASE JOB IS BUILDINGS 431, 432, 434, 435

FIELD MATERIAL

	DEVICE TAG	QTY	CODE NUMBER	DESCRIPTION
	PS-1-PS-2	16	P74FA-2C	DIFFERENTIAL PRES CONTROL
—	PT-1	8	PT-250-3-5-8	DIFFERENTIAL PRESSURE TRANSD-TRIAB
	TE-1-TE-2	16	TE-6400-4	SENSOR, 1000 OHM +/- .25%
		16	TE-6401-3	PACKING NUT & FTG.S
		16	WZ-1000-2	STAINLESS STEEL WELL,1/2"
	V-1-V-3	24	——	SEE VALVE SCHEDULE

PANEL MATERIAL

	DEVICE TAG	QTY	CODE NUMBER	DESCRIPTION
	ACC	28	G-2010-5	AIR GAGE 1-1/2"
(P)	ACC	8	M-6000-293	SCREW-ON LANCETED NAME-
(P)	ACC	352	PB-113-15	TERM SCC MINIATURE 300V
(P)	ACC	48	PB-113-3	TERMINAL BLOCK; MEDIUM
(P)	DC-1	8	AS-LCP2000-8	LAB - PANEL/DIN MOUNT
(P)	EP-1-EP-2	16	EP-6000-4	EP TRANSD.; 4/20MILLI-4 M
(P)	EP-3	8	EP-4529-6	PNM INPUT TO PNEUMATIC TRANS-TRIAB
(P)	HS-1	8	PB-112-22	BUSS 32U FUSE HOLDER/
		8	PB-112-23	FUSE T-5 (SAMP) FOR
(P)	HS-2	8	PB-117-2	RECEPTACLE POLARIZED
(P)	P-1	8	M-6189-1824	CONTROL CABINET;STD. FACE
(P)	R-1-R-4	32	PB-197-21	RELAY; PLUG IN 3PDT
		32	PB-181-25	RELAY SOCKET; 11PIN BLADE
(P)	TX-1	8	Y64AL-2C	TRANSFORMER

ANY MATERIAL WITH A (P) PRECEEDING THE DEVICE TAG IS CONSIDERED PROPRIETARY EQUIPMENT AND IS BEING SUPPLIED BY JOHNSON CONTROLS, INC. ALL OTHER MATERIAL IS NON-PROPRIETARY EQUIPMENT.

Motor Control

(TYPICAL FOR SIXTEEN)

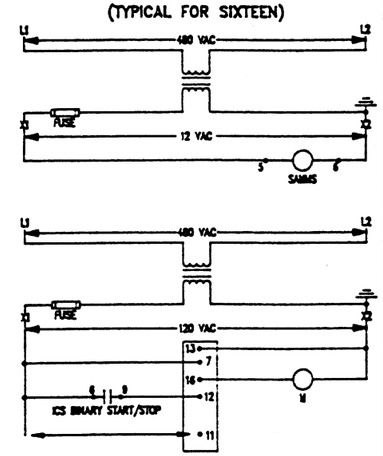

LEADER LINE INDICATES POSSIBLE FUTURE CONECTION FOR SAFETY CONTACTS.

EXHAUST FAN EF-1001-8 MOTOR CONTROL STARTER CIRCUIT

(TYPICAL FOR SIXTEEN)

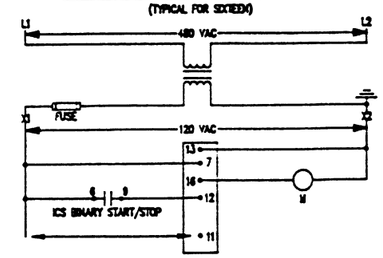

LEADER LINE INDICATES POSSIBLE FUTURE CONECTION FOR SAFETY CONTACTS.

COPYRIGHT JOHNSON CONTROLS, INC.1993

DRAWING TITLE
Lab/Office Modules
Heating Water Bridge
Low Temperature Water
Tertiary Heating System

REFERENCE DRAWING	NO.	REVISION—LOCATION	ECN	DATE	BY
	1	GENERAL		07/01/93	DCS

SALES ENGR JP · PROJECT MGR SF · APPL. ENGR DCS · DRAWN DCS DATE 08/01/93 · APPROVED BY DATE

PROJECT
The Argonne National Labs
Advanced Photon Source Campus
9700 Cass Avenue South
Argonne, IL 60439

JOHNSON CONTROLS
Systems & Services Division
3007 WALNUT ROAD
ARLINGTON HEIGHTS
ILLINOIS 60005
708/364-1500 Main
708/806-4438 Eng

CONTRACT NUMBER 91390-0009
DRAWING NUMBER 91-9-F-03A

FILE: LOM_HW
DCODE: 19930708.1158

EXPERIMENT FACILITIES
LOM
10/4/93 (CFC)