# Building 450 Process Water Flow Diagram

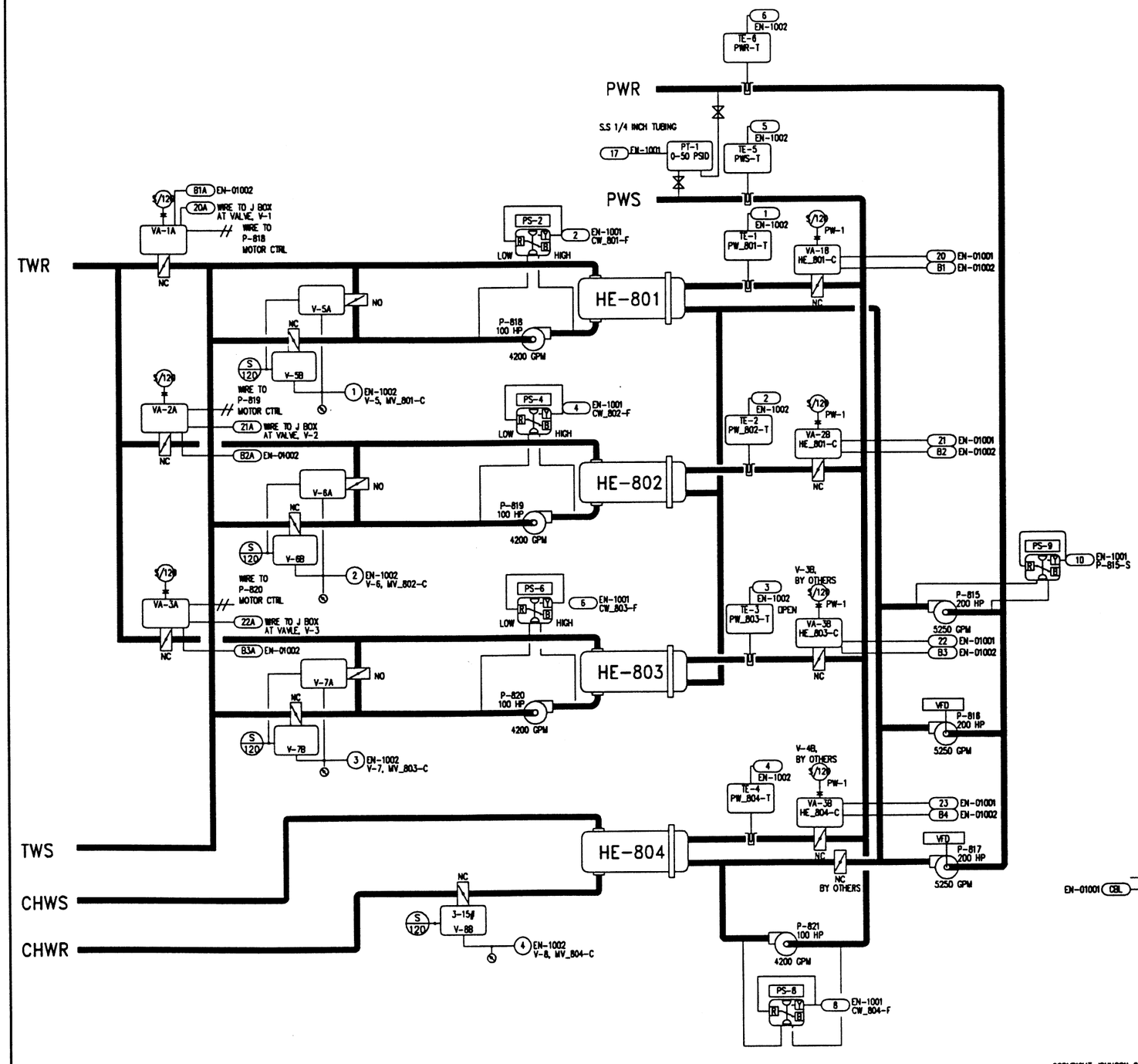


FIELD MATERIAL

| DEVICE TAG | QTY | CODE NUMBER | DESCRIPTION |
|---|---|---|---|
| PS-2,PS-4, PS-6, PS-8-PS-9 | 5 | P74FA-5C | DIFFERENTIAL PRES CONTROL |
| PT-1 | 1 | PT-550-3-4D | DIFFERENTIAL PRESS TRANS-TRIAD |
| TE-1-TE-6 | 6 | TEP-L000000 | SENSOR; PROBE, 1000 OHM |
| | 6 | TE-6001-3 | PACKING NUT & FTG.S |
| | 6 | WZ-1000-2 | STAINLESS STEEL WELL, 1/2" |
| V-5A, V-5B-V-6A, V-6B-V-7A, V-7B V-8B, VA-1A, VA-1B-VA-2A, VA-2B-VA-3A, VA-3B-VA-4A | 15 | ---- | SEE VALVE SCHEDULE |

## Motor Control

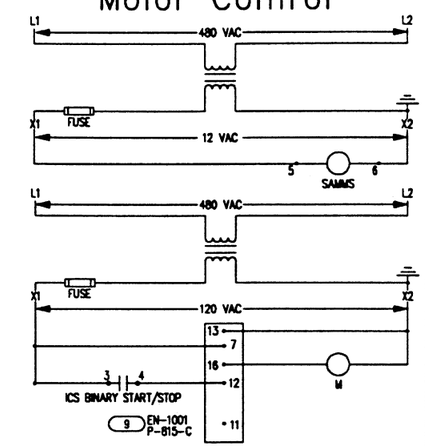


## VFD-P-516

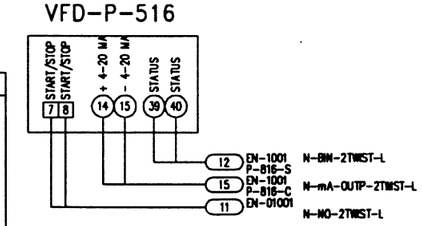


## VFD-P-517

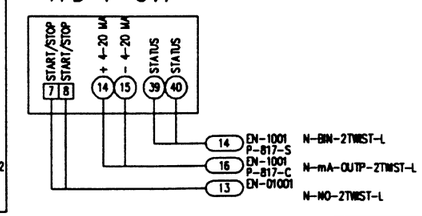


## DETAIL PW-1

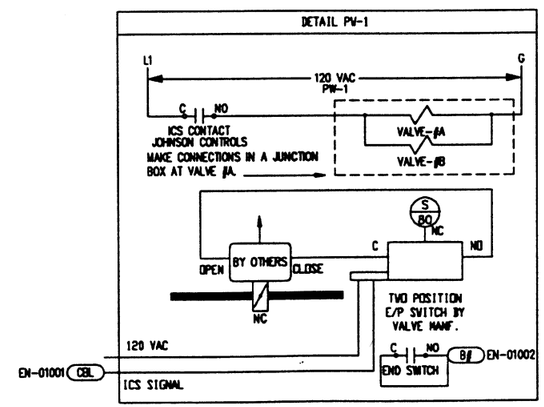


COPYRIGHT JOHNSON CONTROLS, INC.1993

DRAWING TITLE
Building 450 - APS Utilities
Flow Diagram and Equipment
Locations for the Process
Water Circuit

PROJECT
The Argonne National Labs
Advanced Photon Source Campus
9700 Cass Avenue South
Argonne, IL 60439

| REV | REVISION-LOCATION | DATE | BY |
|---|---|---|---|
| | RECORD | 04/11/94 | SF |
| 7 | REV HE-804 SEQ | 03/01/94 | SF |
| 6 | P-516/17 VFD | 02/17/94 | SF |

| REFERENCE DRAWING | | | ECN |
|---|---|---|---|
| SALES ENGR | PROJECT MGR | APPL. ENGR | |
| JP | SF | DCS | |

DRAWN BY SF DATE 12/17/91
APPROVED BY DATE

FILE: 450_PFLW
DCODE: 19940301.1611

JOHNSON CONTROLS
Systems & Services Division

3007 WALMO ROAD
ARLINGTON HEIGHTS
ILLINOIS 60005
708/364-1500 Main
708/806-4438 Eng

CONTRACT NUMBER 91390-0009
DRAWING NUMBER 91-9-A-03A