REVISIONS					
ZONE	REV	DESCRIPTION	BY	APPROVED	DATE

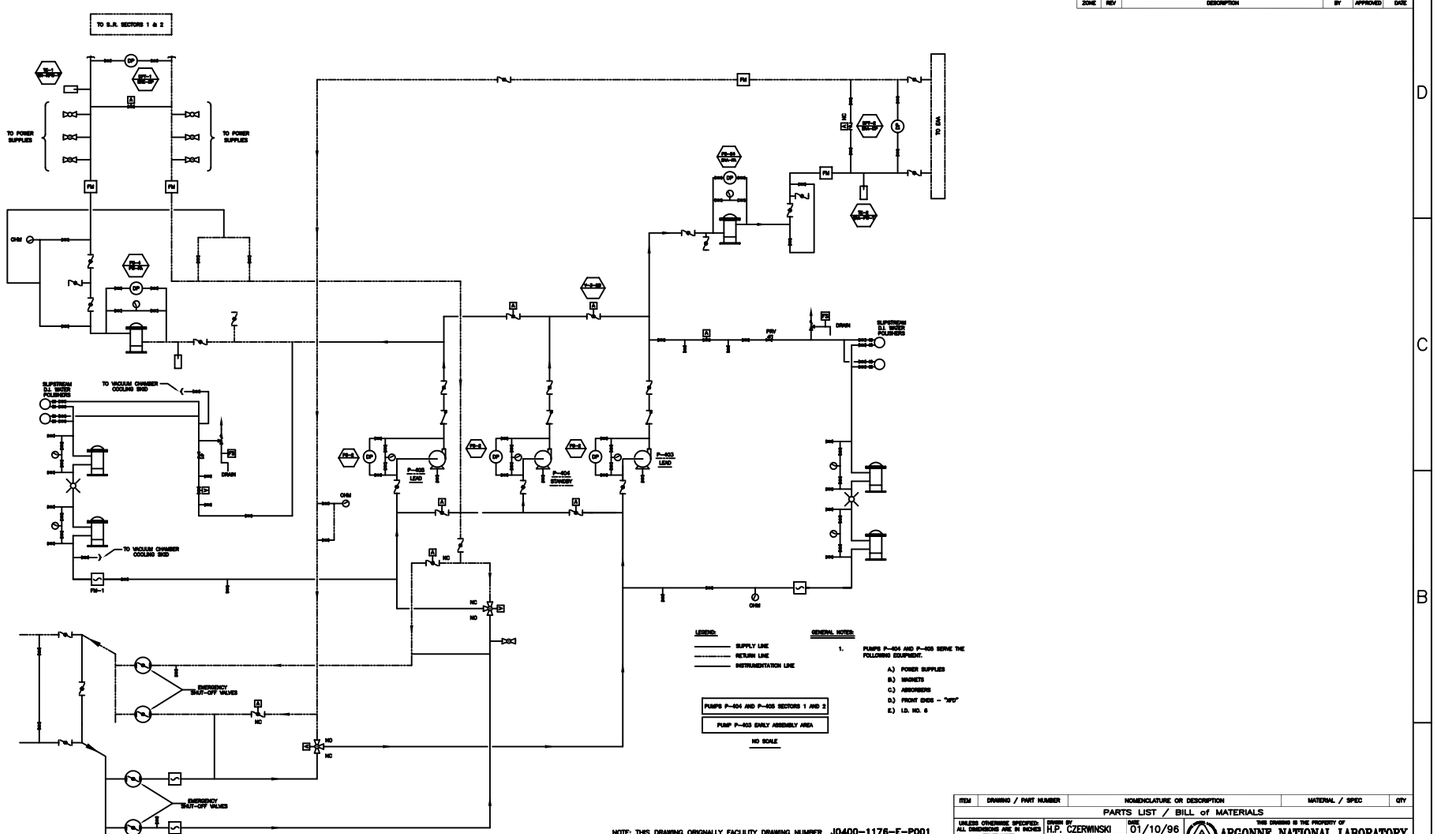

NOTE: THIS DRAWING ORIGINALLY FACILITY DRAWING NUMBER J0400-1176-E-P001
SHEET 1 OF 20

JOHNSON CONTROLS TAG

PUMP	BUTTERFLY VALVE	PRESS. REDUCG REG.	SENSOR - DIFF. PRESS.	FLOW METER	TEMPERATURE SENSOR
BALL VALVE	BALL CONTROL VALVE	BUTTERFLY CONTROL VALVE	PRESSURE GAGE	ULTRASONIC FLOWMETER	FLEX CONNECTOR
FILTER	CHECK VALVE	RESISTIVITY METER	HOSE CONNECTION	THERMOMETER
UV LIGHT	PRESSURE RELIEF VALVE	3-WAY CONTROL VALVE	FLOW SWITCH

ITEM	DRAWING / PART NUMBER	NOMENCLATURE OR DESCRIPTION	MATERIAL / SPEC	QTY

PARTS LIST / BILL of MATERIALS

UNLESS OTHERWISE SPECIFIED: ALL DIMENSIONS ARE IN INCHES
TOLERANCES:
DECIMALS: X ±.1, XX ±.01, XXX ±.005
ANGULAR: ±1°
SURFACE ROUGHNESS: 125
BREAK ALL SHARP EDGES. SHOT BLAST AREAS OF SHA.
REMOVE BURRS TO 0.5 MAX. ACCEPTABLE BY CALIBRATION & ACCEPTABLE BY LASER NOT VALID
MATERIAL: SEE PART LIST
ELECTRONIC FILE NAME: A2402000

DRAWN BY: H.P. CZERWINSKI — DATE: 01/10/96
CHECKED BY: — DATE
DESIGNED BY: — DATE
RESPONSIBLE ENGINEER: — DATE
GROUP LEADER: — DATE
APPROVED BY: — DATE
APPROVED BY: — DATE
APPROVED BY: — DATE

THIS DRAWING IS THE PROPERTY OF
ARGONNE NATIONAL LABORATORY
ADVANCED PHOTON SOURCE

TITLE:
PIPING & INSTRUMENT DIAGRAM
EXPERIMENTAL HALL
SECTORS 01 & 02 & EARLY ASSEMBLY AREA
PUMPS P-404, P-405 AND P-403

SIZE: D — FSCM No.: 0HRH5 — DRAWING NUMBER: 31-100100 — REV.: 00
SCALE: 1:1 — DO NOT SCALE DRAWING — SHEET: 1 of 1