REVISIONS					
ZONE	REV	DESCRIPTION	BY	APPROVED	DATE
	01	PUMP NAMES CHANGED PER DCN 960710-03	HPC		

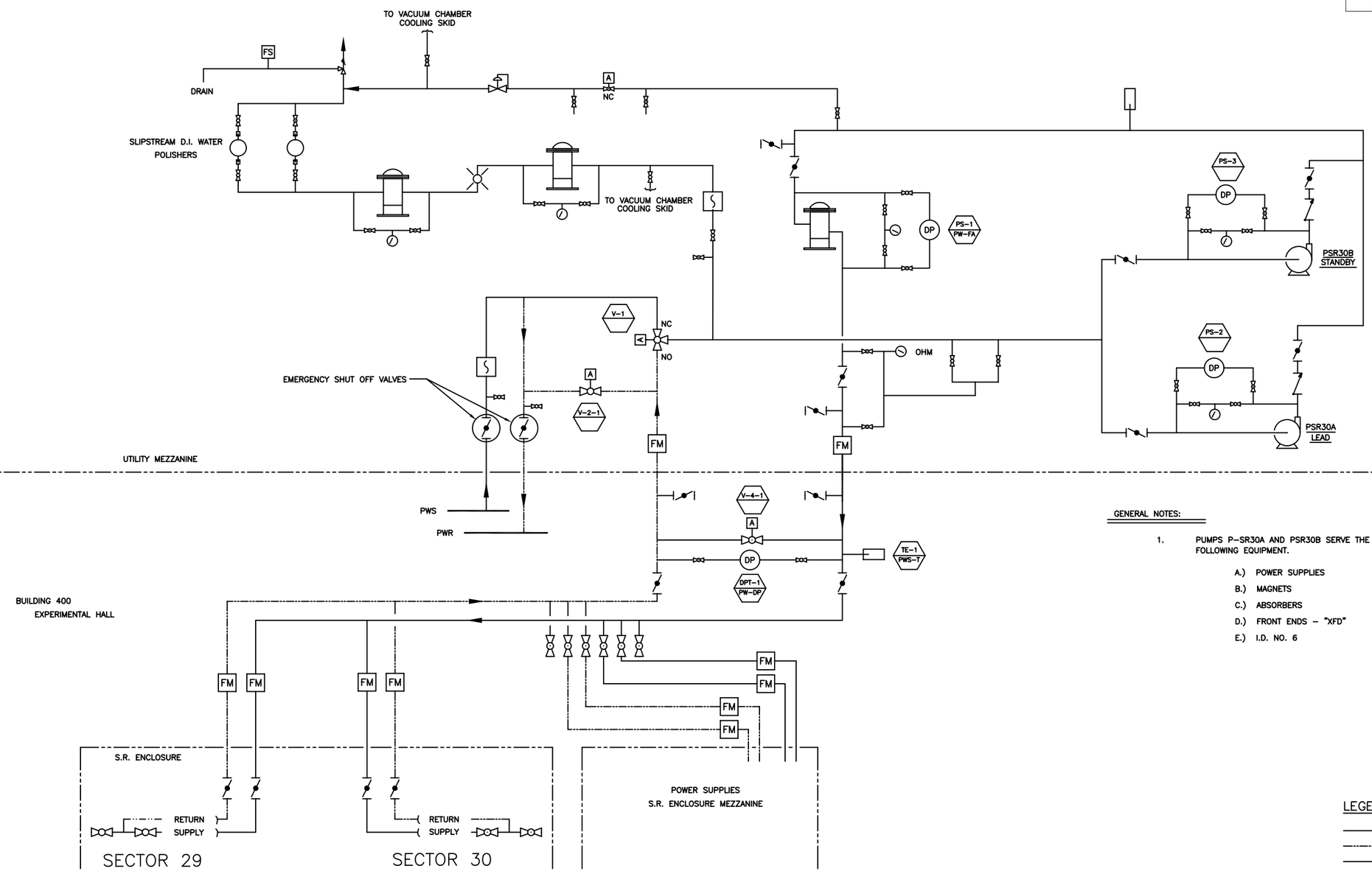

GENERAL NOTES:

1. PUMPS P-SR30A AND PSR30B SERVE THE FOLLOWING EQUIPMENT.
   - A.) POWER SUPPLIES
   - B.) MAGNETS
   - C.) ABSORBERS
   - D.) FRONT ENDS – "XFD"
   - E.) I.D. NO. 6

LEGEND:

- SUPPLY LINE
- RETURN LINE
- INSTRUMENTATION LINE

PUMPS PSR30A AND PSR30B SECTORS 29 AND 30

NO SCALE

NOTE: THIS DRAWING ORIGNALLY FACLILITY DRAWING NUMBER J0400-1189-E-P015 SHEET 15 OF 20

JOHNSON CONTROLS TAG
XX-X
XXX-X
NC – NORMALLY CLOSED
NO – NORMALLY OPEN

PUMP, FILTER, UV LIGHT, BUTTERFLY VALVE, BALL VALVE, CHECK VALVE, PRESSURE RELIEF VALVE, PRESS. REDUCG REG., BALL CONTROL VALVE, 3-WAY CONTROL VALVE, BUTTERFLY CONTROL VALVE, OHM RESISTIVITY METER, SENSOR – DIFF. PRESS., PRESSURE GAGE, FLOW SWITCH, FLOW METER, ULTRASONIC FLOWMETER, HOSE CONNECTION, TEMPERATURE SENSOR, FLEX CONNECTOR, THERMOMETER

ITEM	DRAWING / PART NUMBER	NOMENCLATURE OR DESCRIPTION	MATERIAL / SPEC	QTY

PARTS LIST / BILL of MATERIALS

UNLESS OTHERWISE SPECIFIED: ALL DIMENSIONS ARE IN INCHES
TOLERANCES
DECIMALS: .X ±.1, .XX ±.01, .XXX ±.005
ANGULAR: ±.05°
SURFACE ROUGHNESS: 125
REMOVE ALL BURRS AND BREAK SHARP EDGES .03 MAX.
SURFACE TEXTURE TO BE IN ACCORDANCE WITH LATEST ANSI B46.1
DIMENSIONING & TOLERANCING IN ACCORDANCE WITH LATEST ANSI Y14.5

MATERIAL: SEE PART LIST
ELECTRONIC FILE NAME: A2403401

DRAWN BY: H.P. CZERWINSKI	DATE: 01/10/96	THIS DRAWING IS THE PROPERTY OF ARGONNE NATIONAL LABORATORY ADVANCED PHOTON SOURCE
CHECKED BY: E.SWETIN	DATE: 2/22/96	TITLE: PIPING & INSTRUMENT DIAGRAM EXPERIMENTAL HALL PIPING & INSTRUMENT DIAGRAM EXPERIMENTAL HALL SECTORS 29 & 30
DESIGNED BY: SWETIN EUGENE	DATE	
RESPONSIBLE ENGINEER: SWETIN EUGENE	DATE: 2/22/96	
GROUP LEADER: S.SHARMA	DATE: 2/23/96	
APPROVED BY:	DATE	
APPROVED BY:	DATE	
APPROVED BY:	DATE	

SIZE	FSCM No.	DRAWING NUMBER:	REV.
D	OHRH5	31-101500	01

SCALE: 1:1 | DO NOT SCALE DRAWING | SHEET: 1 of 1