REVISIONS					
ZONE	REV	DESCRIPTION	BY	APPROVED	DATE
	01	PUMP NAMES CHANGED PER DCN 960710-03	HPC		

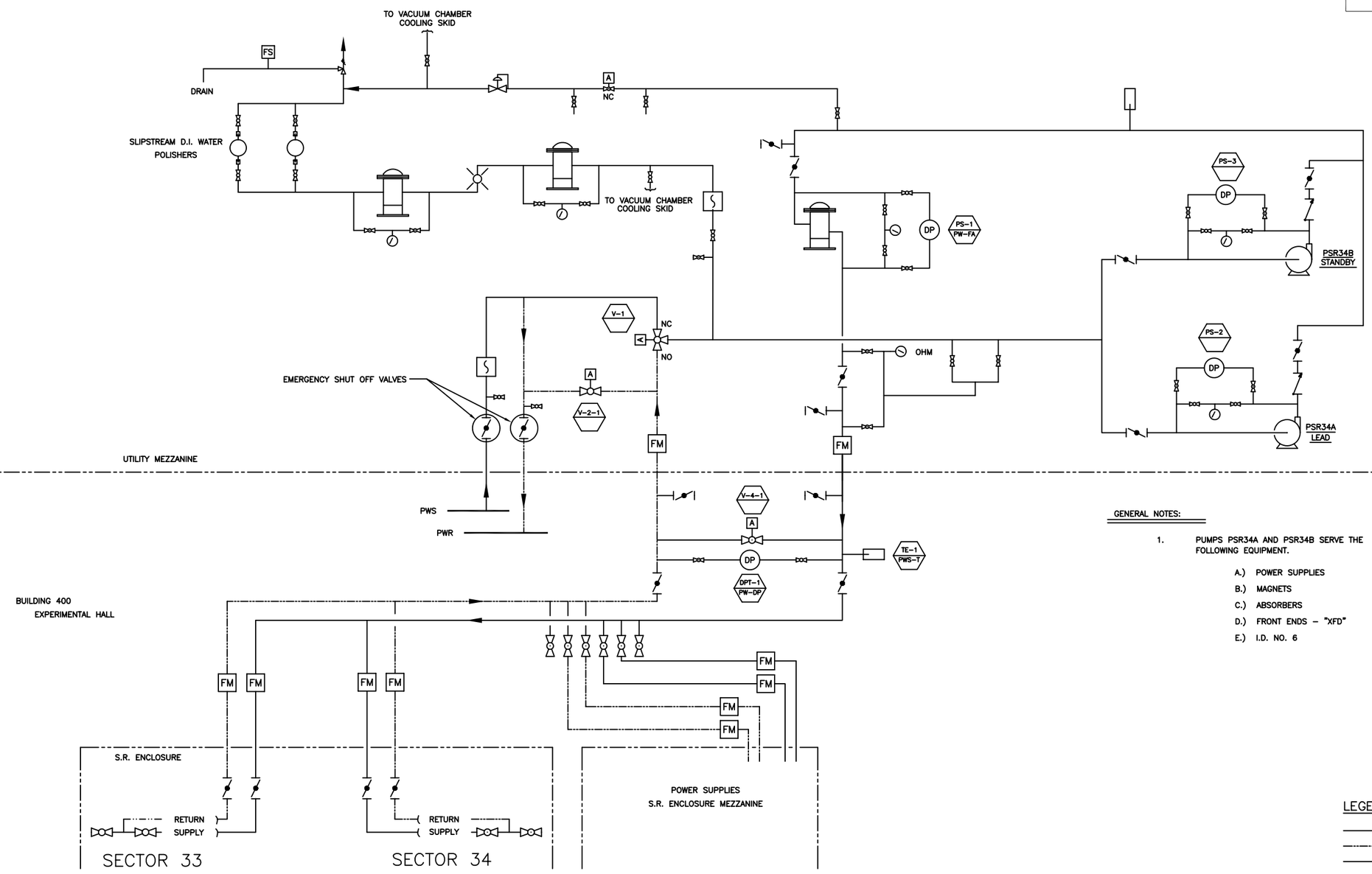

GENERAL NOTES:

1. PUMPS PSR34A AND PSR34B SERVE THE FOLLOWING EQUIPMENT.
   - A.) POWER SUPPLIES
   - B.) MAGNETS
   - C.) ABSORBERS
   - D.) FRONT ENDS – "XFD"
   - E.) I.D. NO. 6

LEGEND:

- SUPPLY LINE
- RETURN LINE
- INSTRUMENTATION LINE

PUMPS PSR34A AND PSR34B SECTORS 33 AND 34

NO SCALE

NOTE: THIS DRAWING ORIGNALLY FACLILITY DRAWING NUMBER J0400-1191-E-P017
SHEET 17 OF 20

JOHNSON CONTROLS TAG
XX-X
XXX-X
NC – NORMALLY CLOSED
NO – NORMALLY OPEN

PUMP
FILTER
UV LIGHT
BUTTERFLY VALVE
BALL VALVE
CHECK VALVE
PRESSURE RELIEF VALVE
PRESS. REDUCG REG.
BALL CONTROL VALVE
3-WAY CONTROL VALVE
BUTTERFLY CONTROL VALVE
OHM RESISTIVITY METER
SENSOR – DIFF. PRESS.
PRESSURE GAGE
FLOW SWITCH
FLOW METER
ULTRASONIC FLOWMETER
HOSE CONNECTION
TEMPERATURE SENSOR
FLEX CONNECTOR
THERMOMETER

ITEM	DRAWING / PART NUMBER	NOMENCLATURE OR DESCRIPTION	MATERIAL / SPEC	QTY

PARTS LIST / BILL of MATERIALS

UNLESS OTHERWISE SPECIFIED: ALL DIMENSIONS ARE IN INCHES
TOLERANCES
DECIMALS: .X ±.1, .XX ±.01, .XXX ±.005 — ANGULAR: ±.05°
SURFACE ROUGHNESS: 125
REMOVE ALL BURRS AND BREAK SHARP EDGES .03 MAX.
SURFACE TEXTURE TO BE IN ACCORDANCE WITH LATEST ANSI B46.1
DIMENSIONING & TOLERANCING IN ACCORDANCE WITH LATEST ANSI Y14.5

MATERIAL: SEE PART LIST
ELECTRONIC FILE NAME: A2403601

DRAWN BY: H.P. CZERWINSKI	DATE: 01/10/96	
CHECKED BY: E.SWETIN	DATE: 2/22/96	
DESIGNED BY: SWETIN EUGENE	DATE:	
RESPONSIBLE ENGINEER: SWETIN EUGENE	DATE: 2/22/96	
GROUP LEADER: S.SHARMA	DATE: 2/23/96	
APPROVED BY:	DATE:	
APPROVED BY:	DATE:	
APPROVED BY:	DATE:	

THIS DRAWING IS THE PROPERTY OF
ARGONNE NATIONAL LABORATORY
ADVANCED PHOTON SOURCE

TITLE:
PIPING & INSTRUMENT DIAGRAM
PIPING & INSTRUMENT DIAGRAM
EXPERIMENTAL HALL
SECTORS 33 & 34
PUMPS PSR34A & PSR34B

SIZE	FSCM No.	DRAWING NUMBER:	REV.
D	OHRH5	31-101700	01

SCALE: 1:1 | DO NOT SCALE DRAWING | SHEET: 1 of 1