Canted Undulator Magnets

The canted undulator magnets are installed in sectors 21, 23, and 24. The dipole magnets are identified as C:BM1, C:BM2, and C:BM3 and the corrector magnet is identified as C:H1/C:V1. The canted undulator magnets are used to create two insertion device beams per sector, rather than one. This provides the CAT with two beams thus increasing the science capacity for that sector.

The original beam trajectory (Config.#1 from below) for the canted undulator is shown in figure 2 [1] . Several configurations are being considered and are listed below:

Config.#1: BM1 and BM3: +0.5 mrad, BM2: -1 mrad, H1s: -1 mrad
Config.#2: BM1 and BM3: -0.5 mrad, BM2: -1 mrad, H1s: 0 mrad
Config.#3: BM1 and BM3: 0.0 mrad, BM2: -1 mrad, H1s: -0.5mrad

The canted undulator magnets may be wired to operate at any one of these configurations until operations decides the best configuration to use. At the writing of this document sector 21, 23, and 24 were set at config.#3.

[1] P. Dan Hartog, TWG Meeting “Canted Undulator Beamline,” March 21, 2002

Canted Undulator Magnets

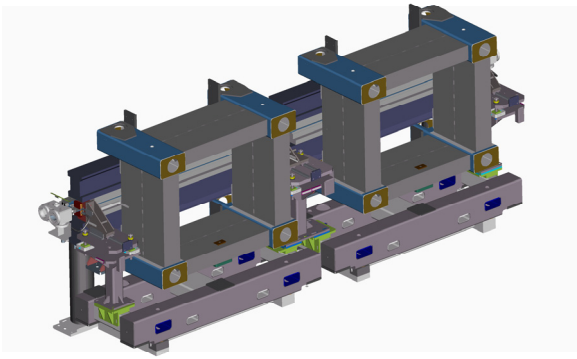

Figure 1: Canted undulator assembly.

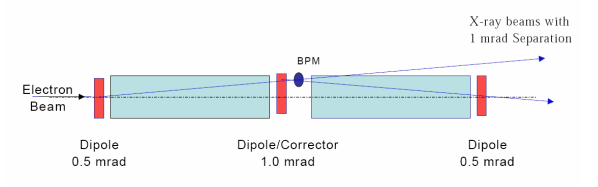

Figure 2: Canted undulator beam trajectory.

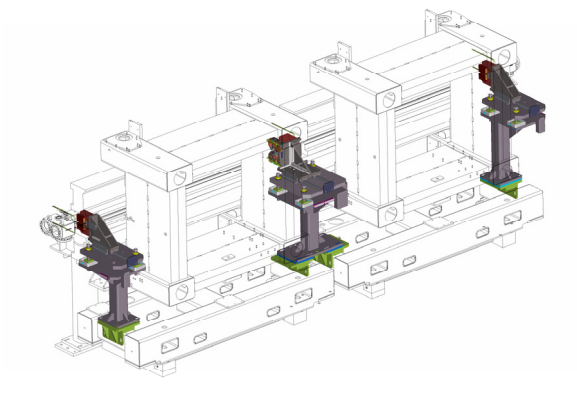

Figure 3: Canted undulator assembly with magnet assemblies shown in solid.

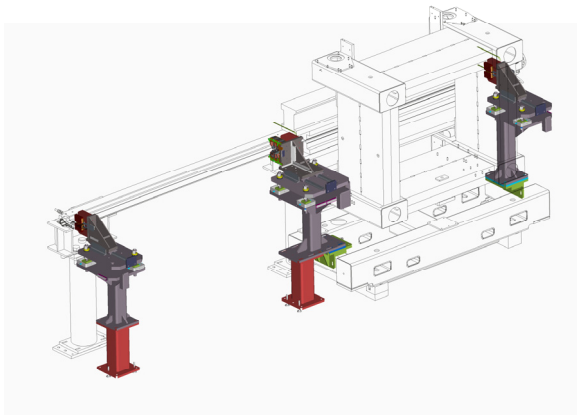

Figure 4: Canted undulator assembly with only one undulator.

Mark Jaski
Last edited on
November 23, 2004

Canted Undulator Magnets

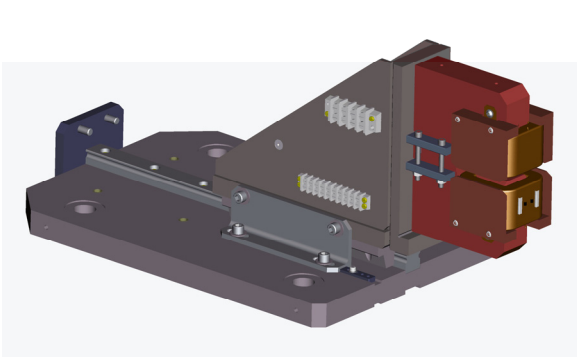

Figure 5: Image of 31010101-503100 right magnet and rail base assembly

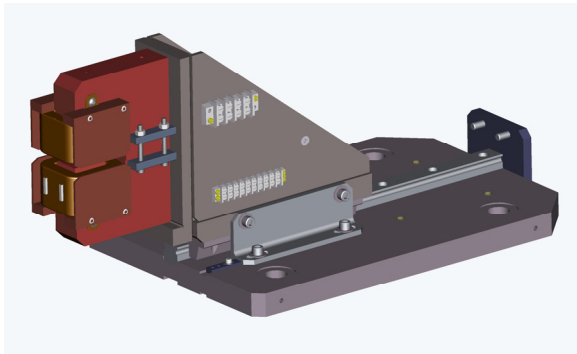

Figure 6: Image of 31010101-504100 left magnet and rail base assembly

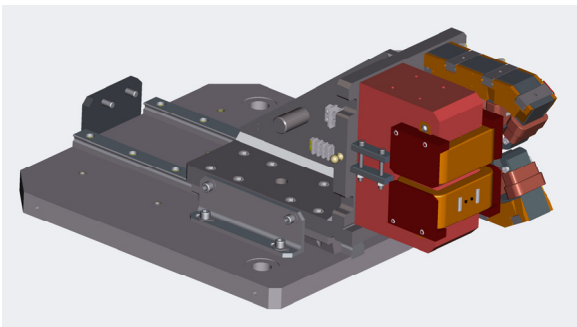

Figure 7: Image of 31010101-505100 center magnet and rail base assembly

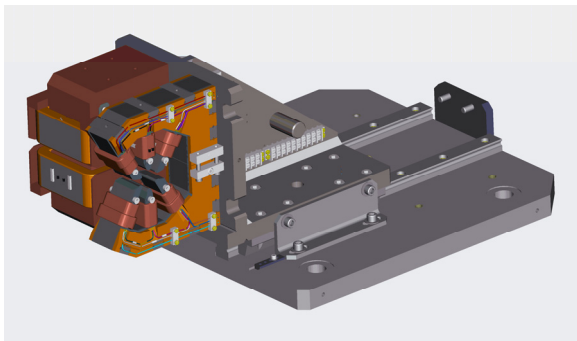

Figure 8: Image of 31010101-505100 center magnet and rail base assembly

Canted Undulator Magnets

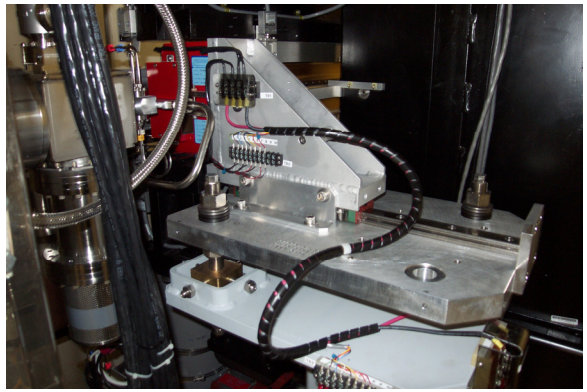

Figure 9: Picture of left magnet and rail base assembly

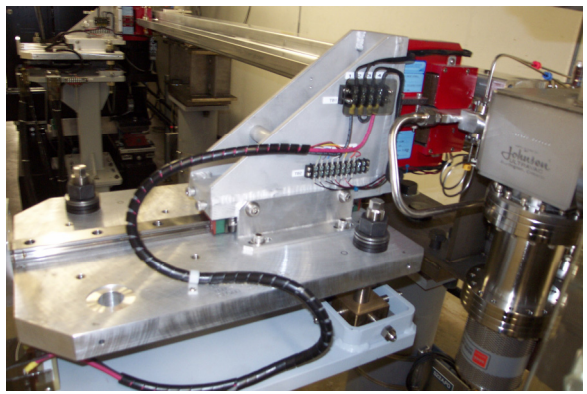

Figure 10: Picture of right magnet and rail base assembly

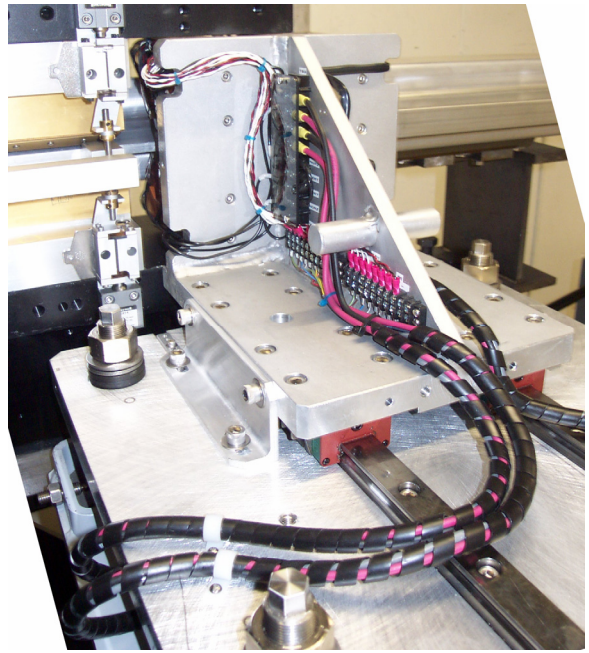

Figure 11: Picture of center magnet and rail base assembly

Canted Undulator Magnets

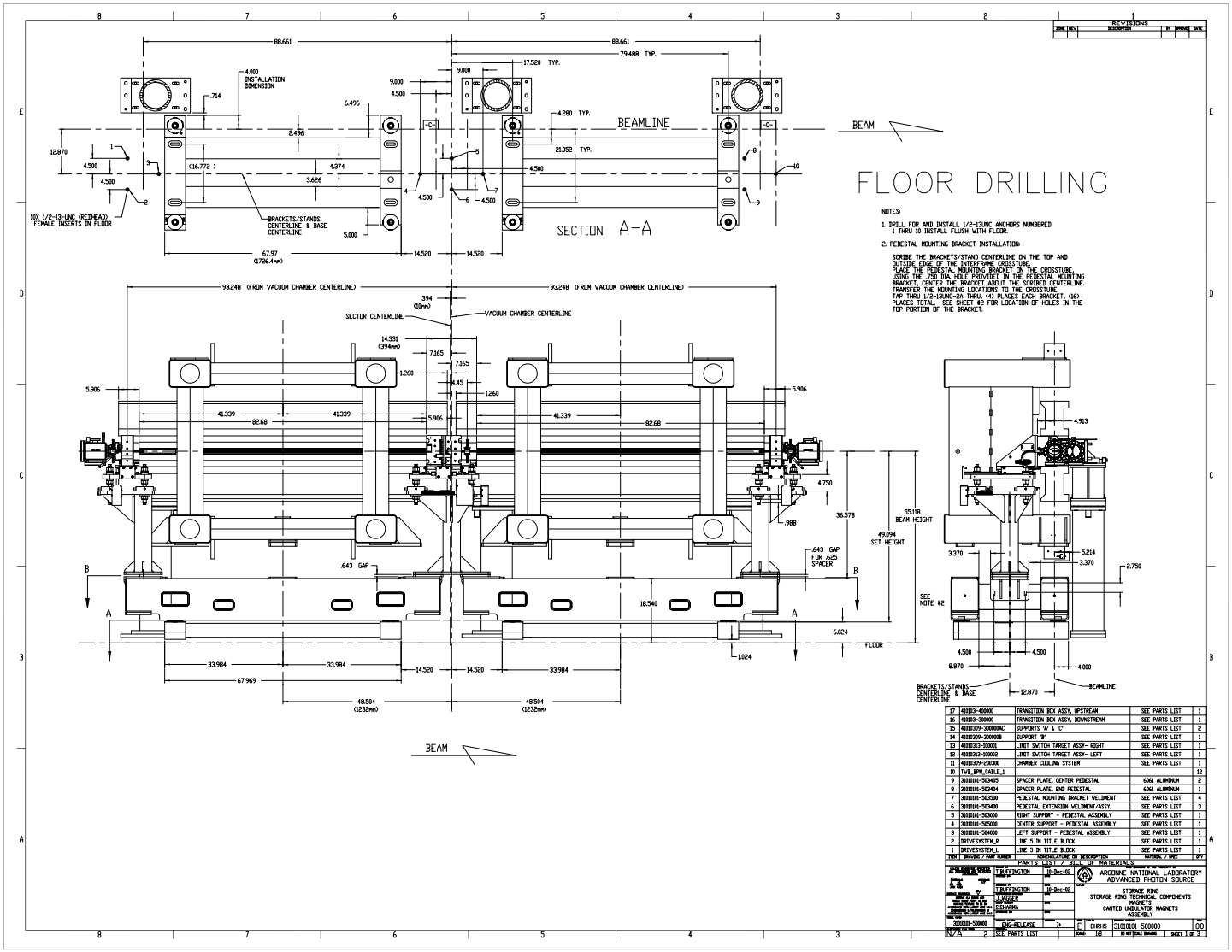

Mark Jaski
Last edited on
November 23, 2004

Canted Undulator Magnets

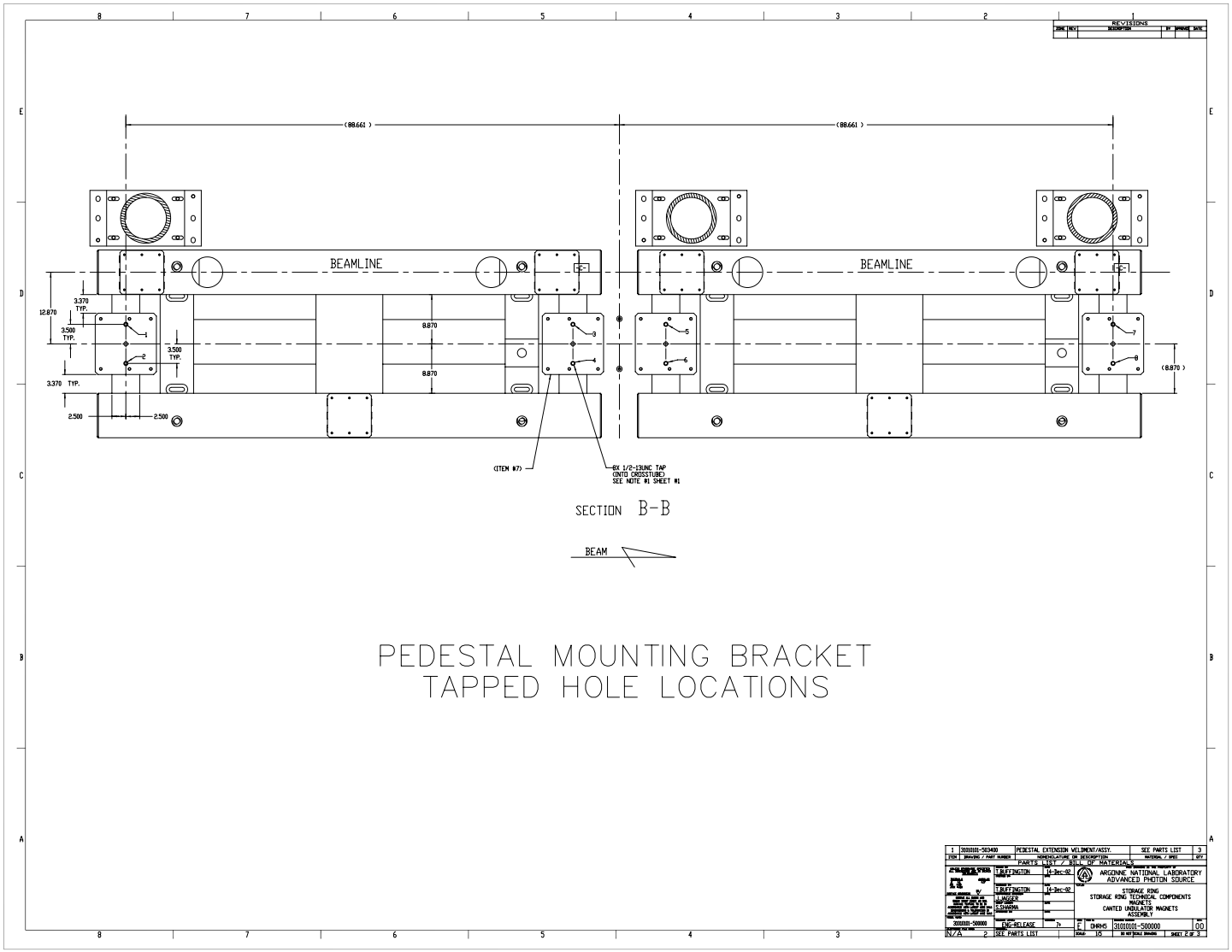

Mark Jaski
Last edited on
November 23, 2004

Canted Undulator Magnets

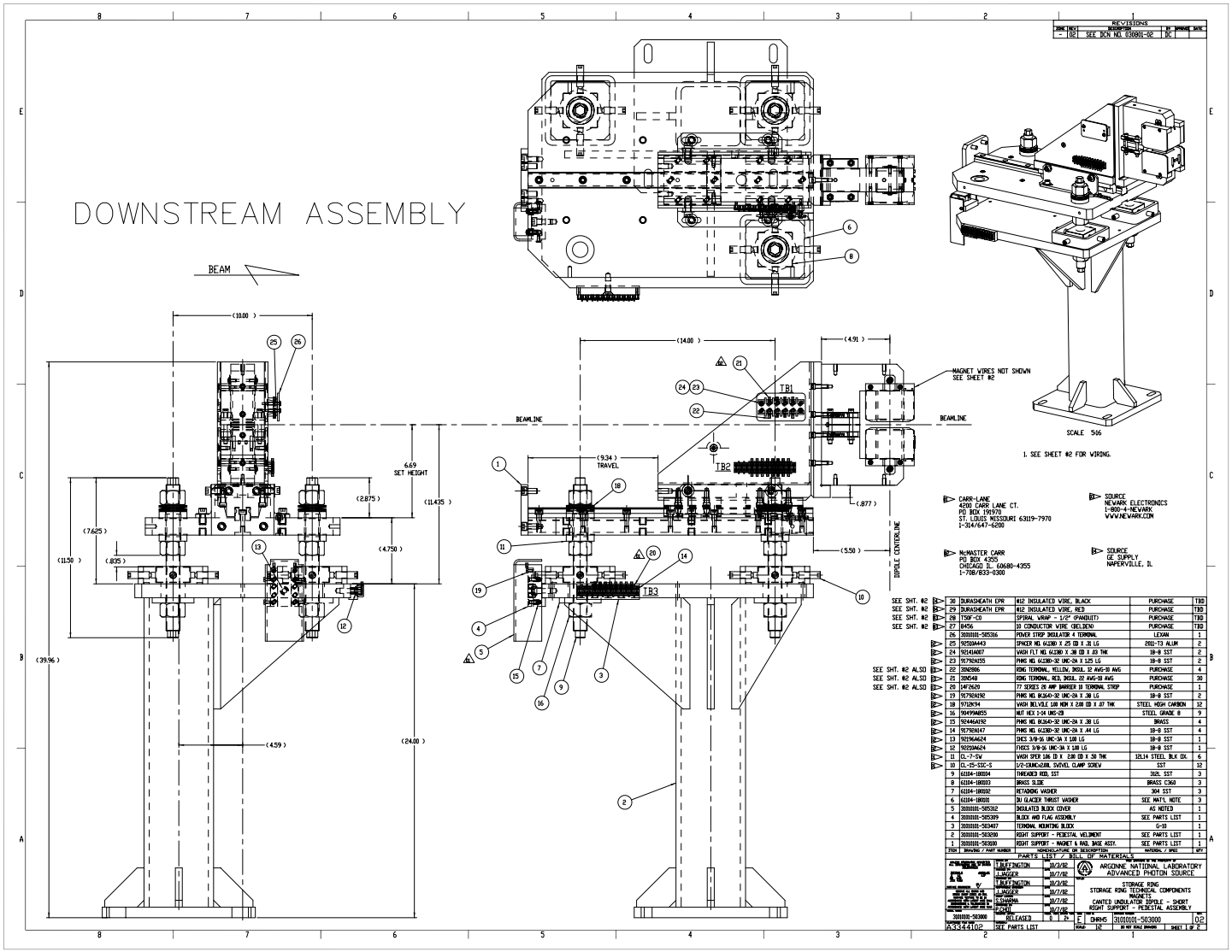

Mark Jaski
Last edited on
November 23, 2004

MECHANICAL ENGINEERING GROUP

ACCELERATOR SYSTEMS DIVISION

Advanced Photon Source
Argonne National Laboratory

Canted Undulator Magnets

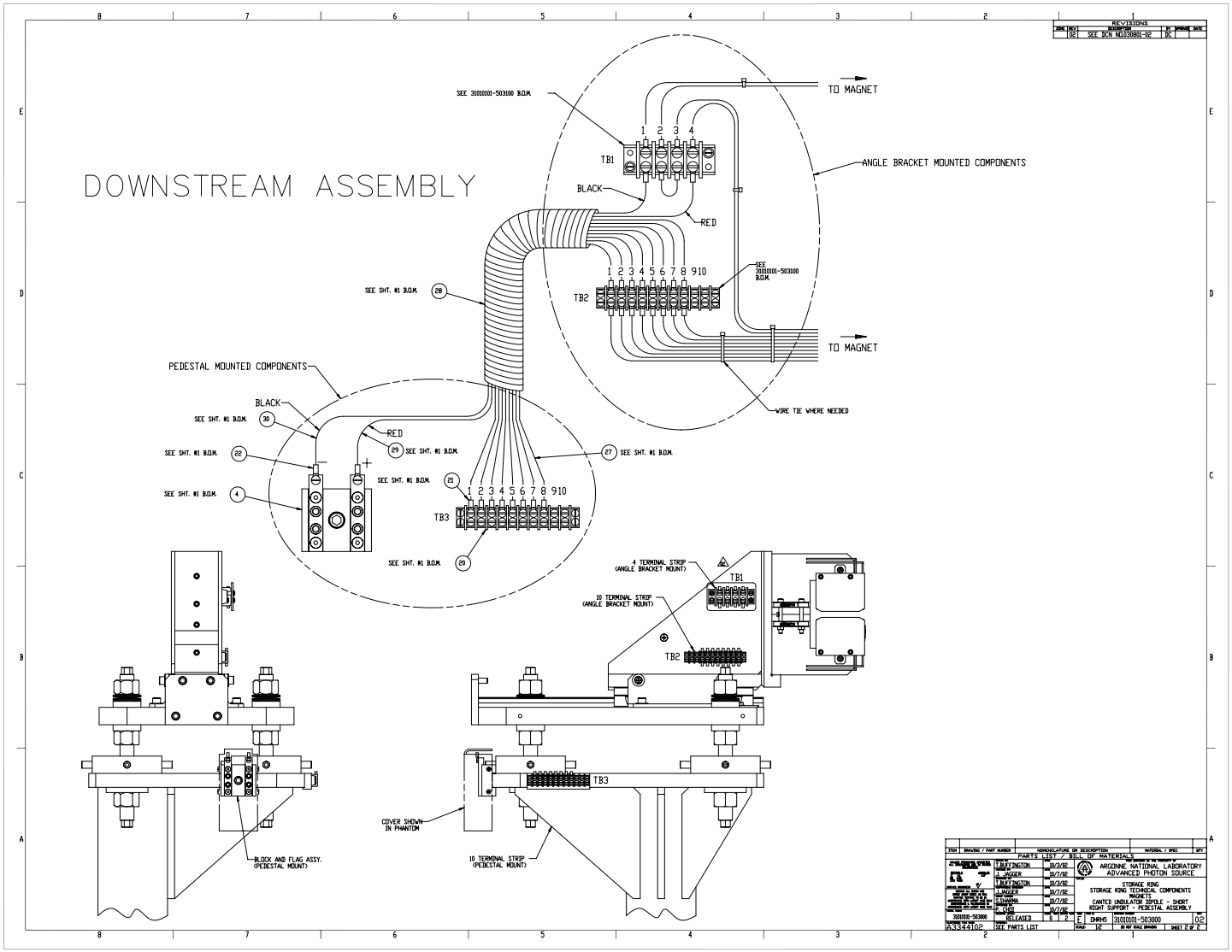

Mark Jaski
Last edited on
November 23, 2004

MECHANICAL ENGINEERING GROUP

ACCELERATOR SYSTEMS DIVISION

Advanced Photon Source
Argonne National Laboratory

Canted Undulator Magnets

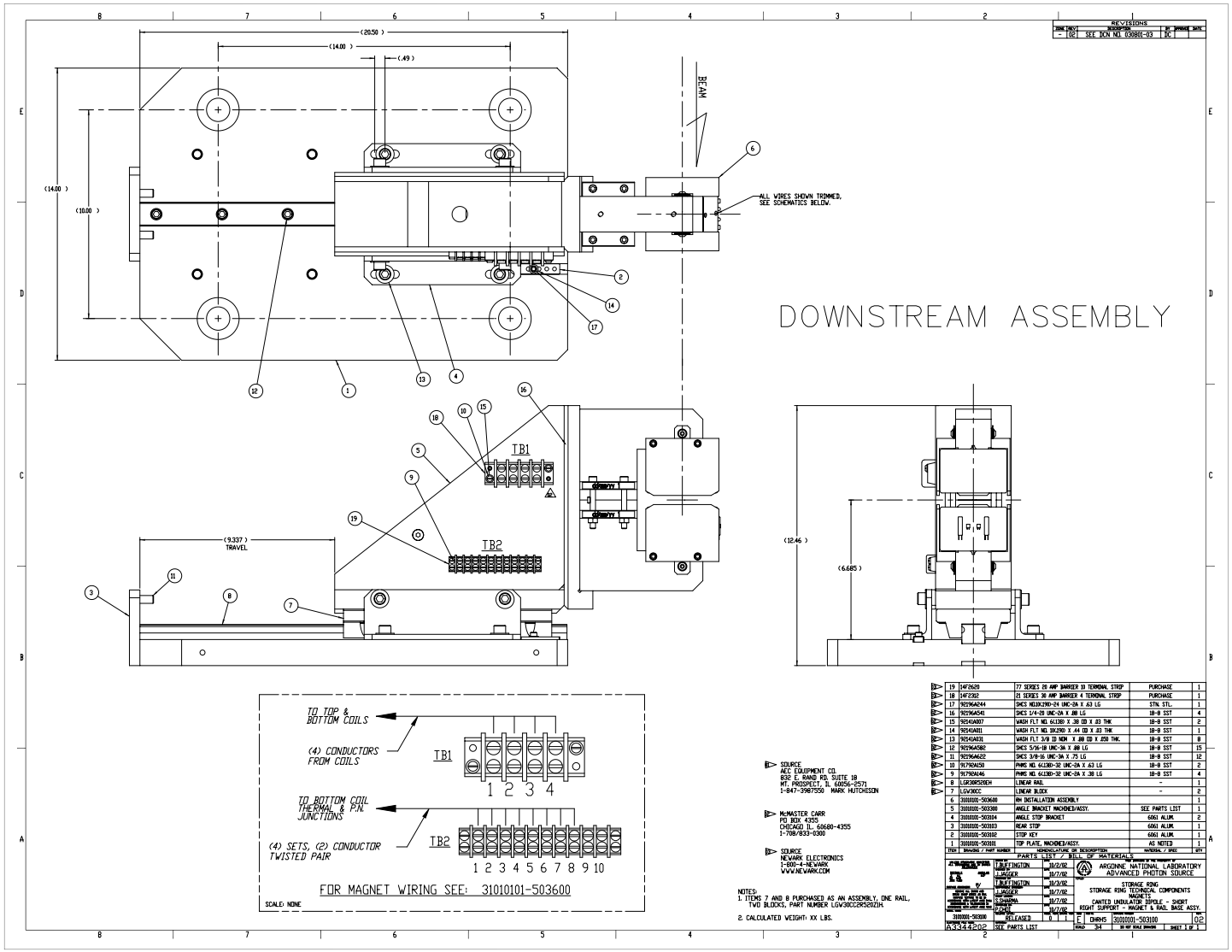

Mark Jaski
Last edited on
November 23, 2004

MECHANICAL ENGINEERING GROUP

ACCELERATOR SYSTEMS DIVISION

Advanced Photon Source
Argonne National Laboratory

Canted Undulator Magnets

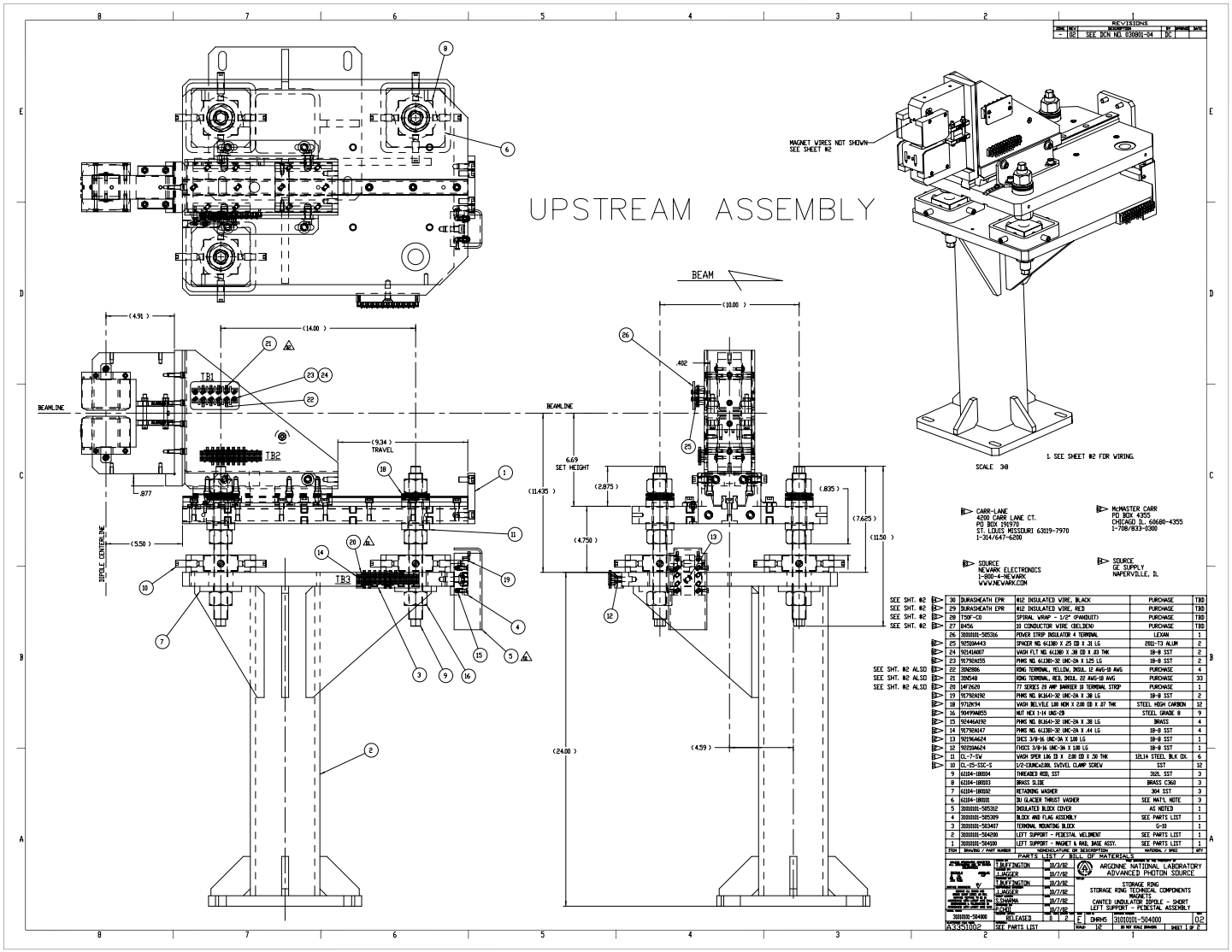

Mark Jaski
Last edited on
November 23, 2004

MECHANICAL ENGINEERING GROUP

ACCELERATOR SYSTEMS DIVISION

Advanced Photon Source
Argonne National Laboratory

Canted Undulator Magnets

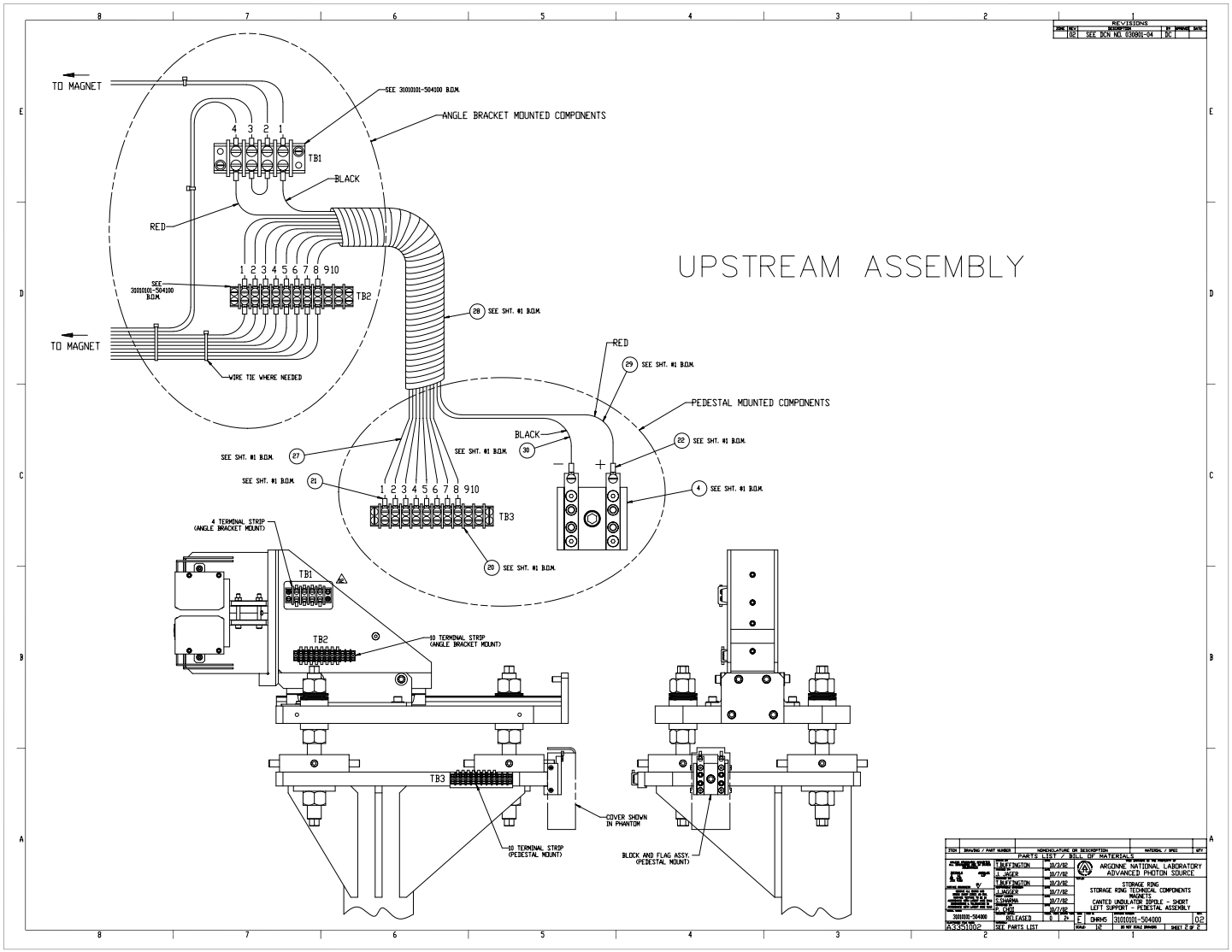

Mark Jaski
Last edited on
November 23, 2004

MECHANICAL ENGINEERING GROUP

ACCELERATOR SYSTEMS DIVISION

Advanced Photon Source
Argonne National Laboratory

Canted Undulator Magnets

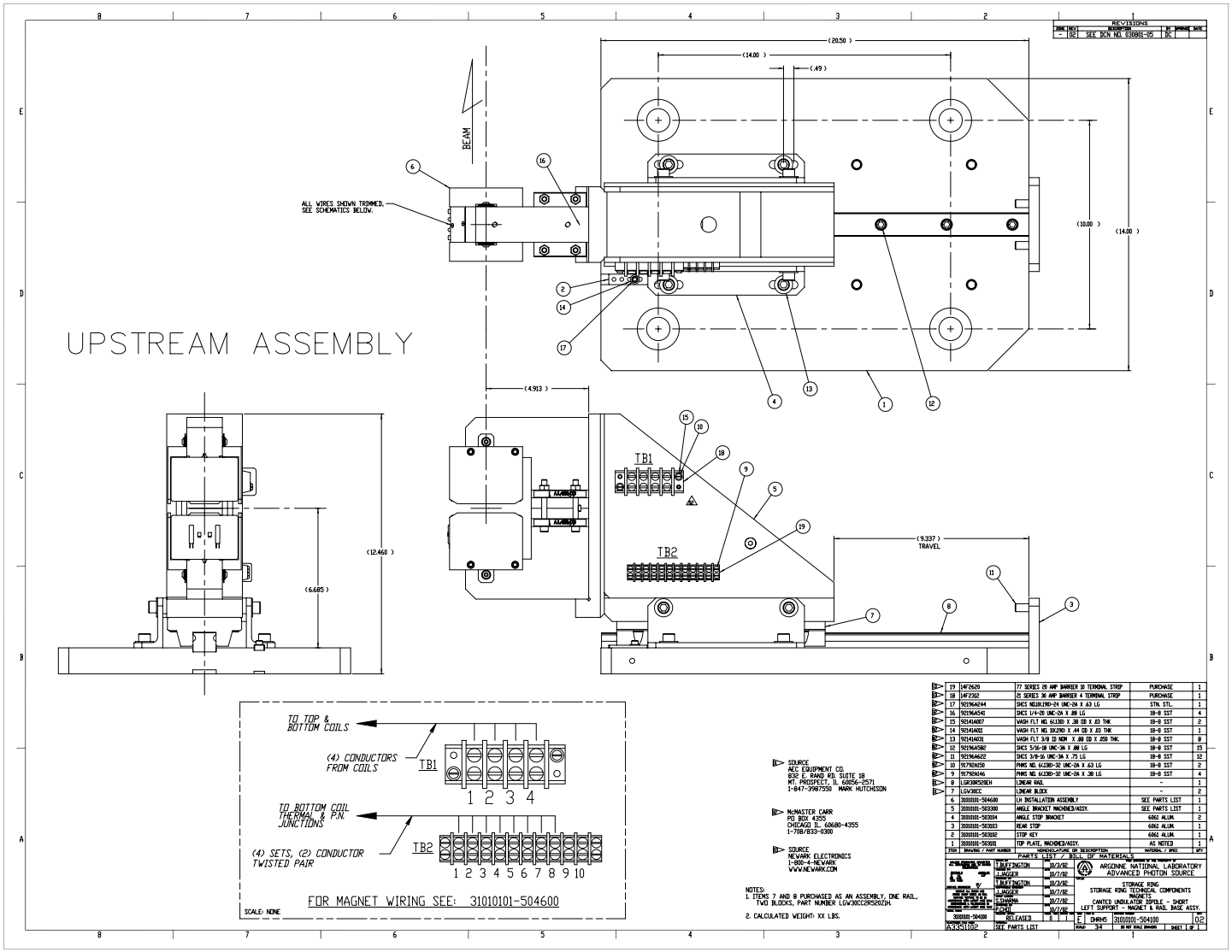

Mark Jaski
Last edited on
November 23, 2004

MECHANICAL ENGINEERING GROUP

ACCELERATOR SYSTEMS DIVISION

Advanced Photon Source
Argonne National Laboratory

Canted Undulator Magnets

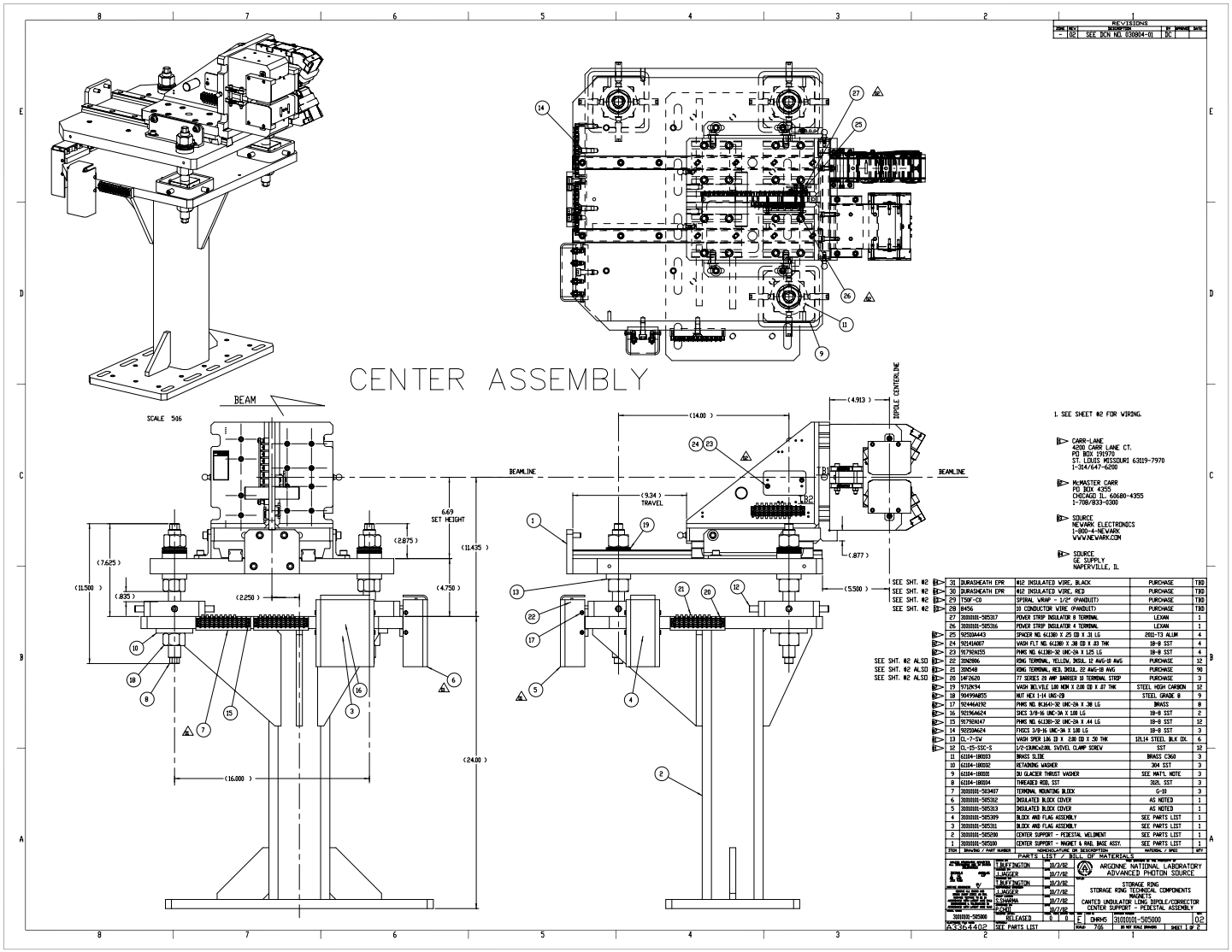

Mark Jaski
Last edited on
November 23, 2004

MECHANICAL ENGINEERING GROUP

ACCELERATOR SYSTEMS DIVISION

Advanced Photon Source
Argonne National Laboratory

Canted Undulator Magnets

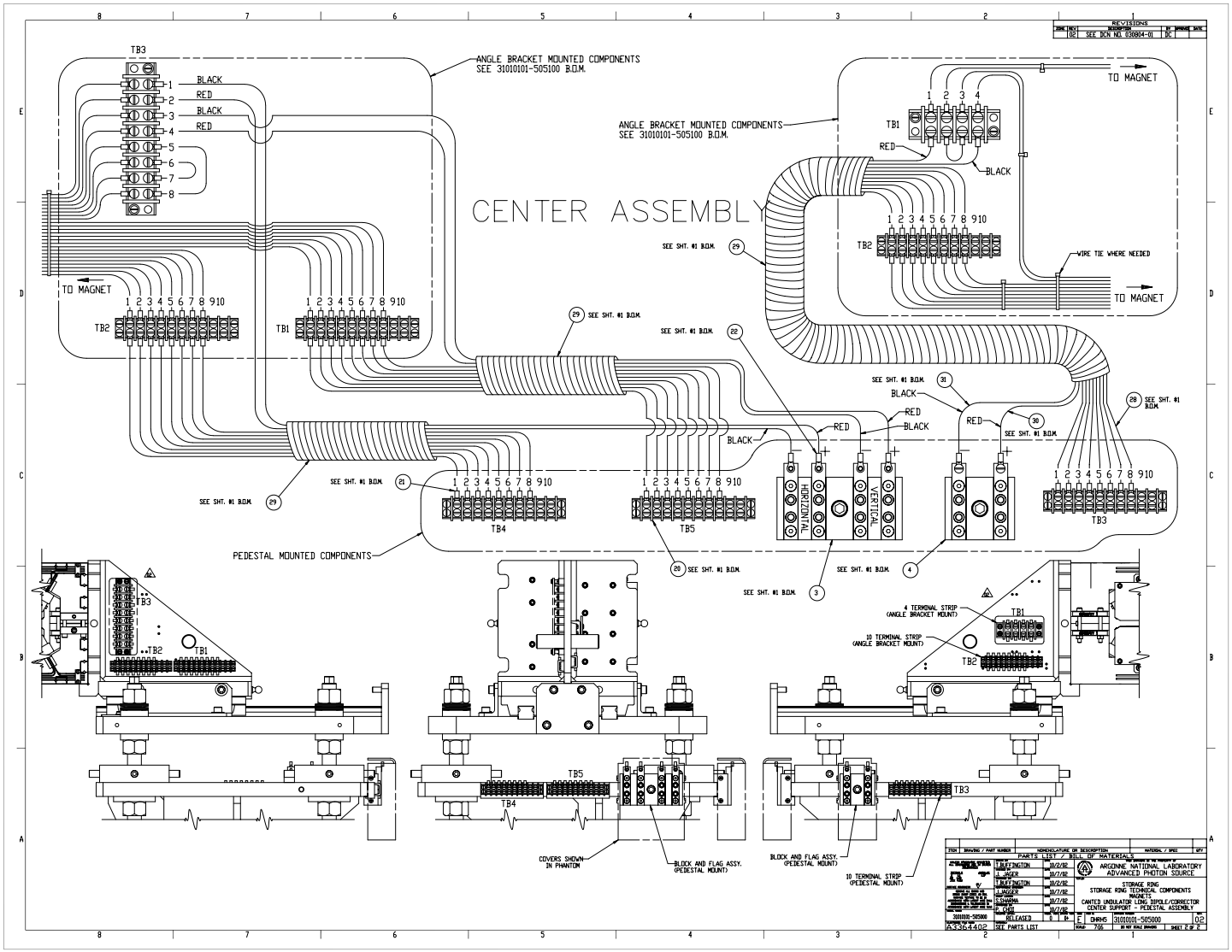

Mark Jaski
Last edited on
November 23, 2004

Canted Undulator Magnets

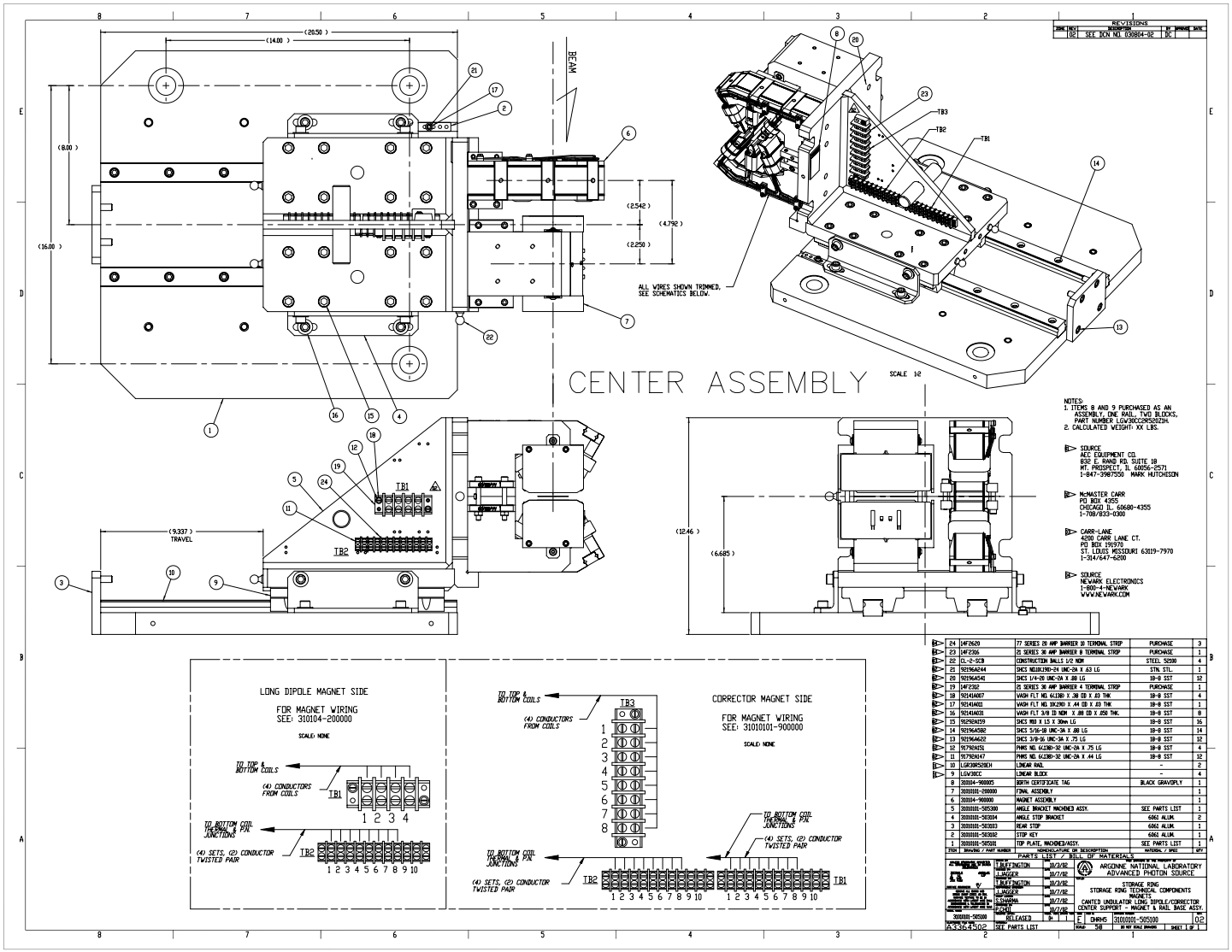

Mark Jaski
Last edited on
November 23, 2004

Canted Undulator Magnets

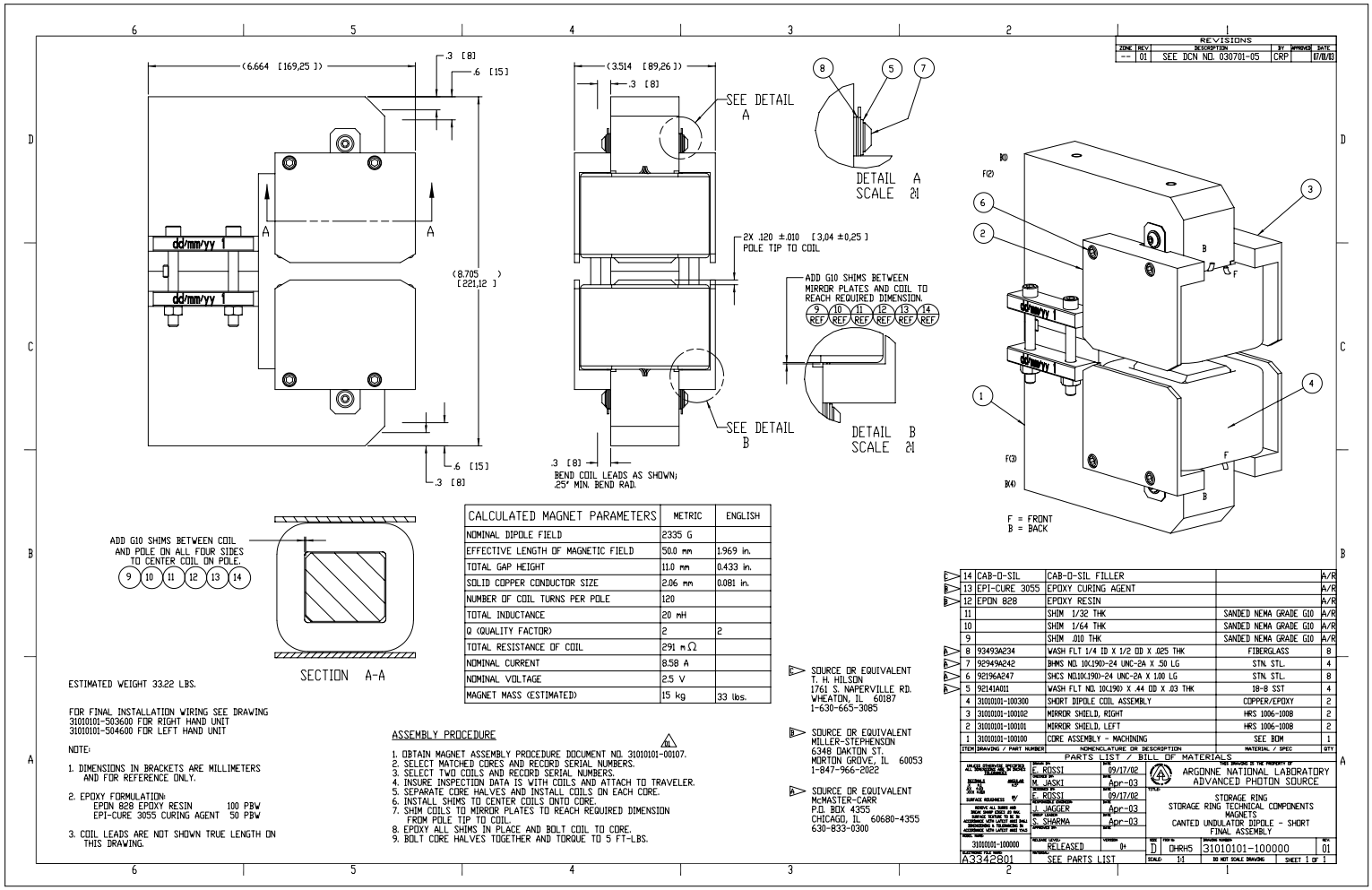

CALCULATED MAGNET PARAMETERS	METRIC	ENGLISH
NOMINAL DIPOLE FIELD	2335 G	
EFFECTIVE LENGTH OF MAGNETIC FIELD	50.0 mm	1.969 in.
TOTAL GAP HEIGHT	11.0 mm	0.433 in.
SOLID COPPER CONDUCTOR SIZE	2.06 mm	0.081 in.
NUMBER OF COIL TURNS PER POLE	120	
TOTAL INDUCTANCE	20 mH	
Q (QUALITY FACTOR)	2	2
TOTAL RESISTANCE OF COIL	291 m Ω	
NOMINAL CURRENT	8.58 A	
NOMINAL VOLTAGE	2.5 V	
MAGNET MASS (ESTIMATED)	15 kg	33 lbs.

Mark Jaski
Last edited on
November 23, 2004

Canted Undulator Magnets

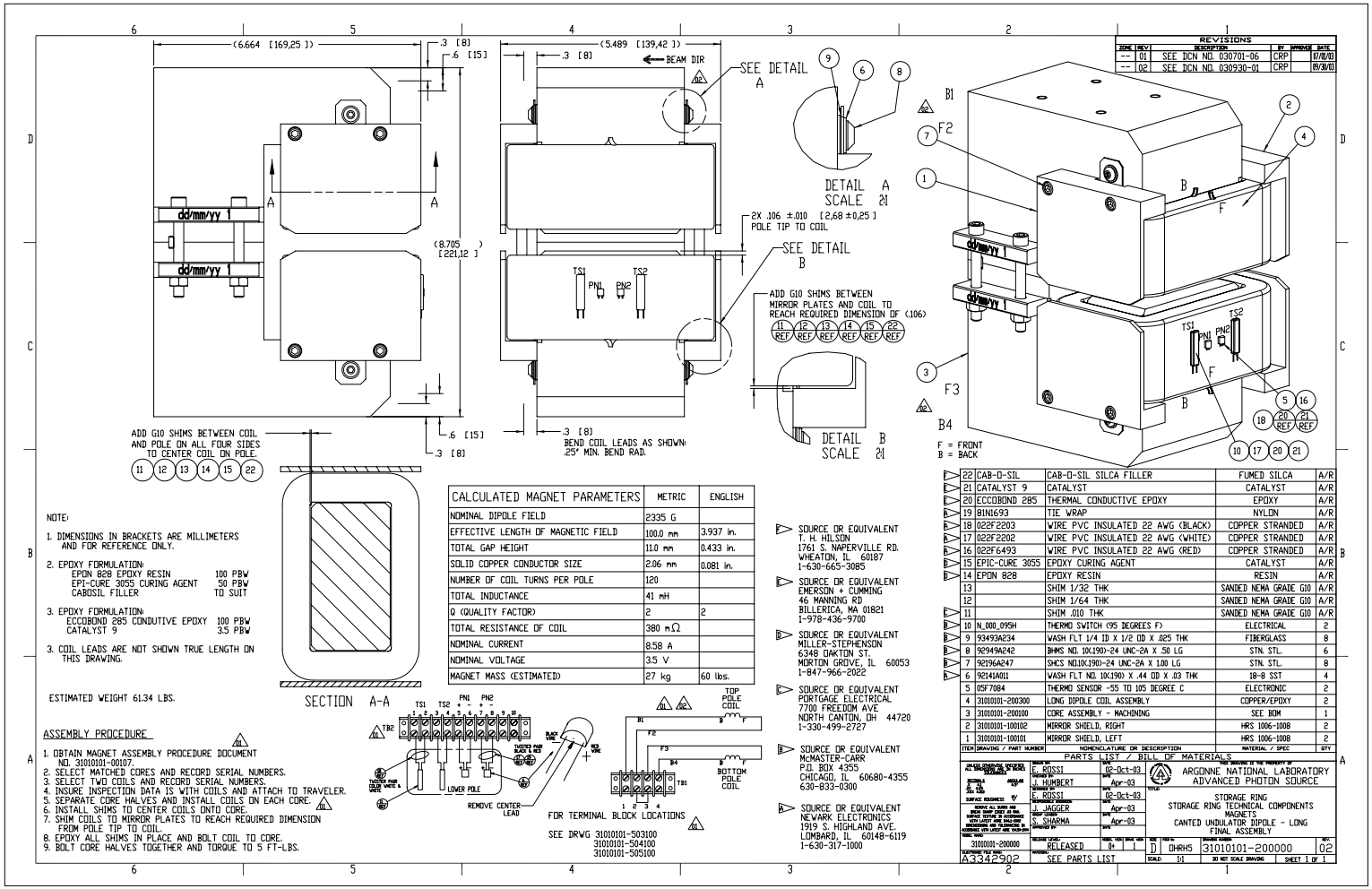

CALCULATED MAGNET PARAMETERS	METRIC	ENGLISH
NOMINAL DIPOLE FIELD	2335 G	
EFFECTIVE LENGTH OF MAGNETIC FIELD	100.0 mm	3.937 in.
TOTAL GAP HEIGHT	11.0 mm	0.433 in.
SOLID COPPER CONDUCTOR SIZE	2.06 mm	0.081 in.
NUMBER OF COIL TURNS PER POLE	120	
TOTAL INDUCTANCE	41 mH	
Q (QUALITY FACTOR)	2	2
TOTAL RESISTANCE OF COIL	380 mΩ	
NOMINAL CURRENT	8.58 A	
NOMINAL VOLTAGE	3.5 V	
MAGNET MASS (ESTIMATED)	27 kg	60 lbs.

ITEM	DRAWING / PART NUMBER	NOMENCLATURE OR DESCRIPTION	MATERIAL / SPEC	QTY
22	CAB-O-SIL	CAB-O-SIL SILCA FILLER	FUMED SILCA	A/R
21	CATALYST 9	CATALYST	CATALYST	A/R
20	ECCOBOND 285	THERMAL CONDUCTIVE EPOXY	EPOXY	A/R
19	BIN1693	TIE WRAP	NYLON	A/R
18	022F2203	WIRE PVC INSULATED 22 AWG (BLACK)	COPPER STRANDED	A/R
17	022F2202	WIRE PVC INSULATED 22 AWG (WHITE)	COPPER STRANDED	A/R
16	022F6493	WIRE PVC INSULATED 22 AWG (RED)	COPPER STRANDED	A/R
15	EPIC-CURE 3055	EPOXY CURING AGENT	CATALYST	A/R
14	EPON 828	EPOXY RESIN	RESIN	A/R
13		SHIM 1/32 THK	SANDED NEMA GRADE G10	A/R
12		SHIM 1/64 THK	SANDED NEMA GRADE G10	A/R
11		SHIM .010 THK	SANDED NEMA GRADE G10	A/R
10	N_000_095H	THERMO SWITCH (95 DEGREES F)	ELECTRICAL	2
9	93493A234	WASH FLT 1/4 ID X 1/2 OD X .025 THK	FIBERGLASS	8
8	92949A242	BHMS NO. 10(.190)-24 UNC-2A X .50 LG	STN. STL.	6
7	92196A247	SHCS NO10(.190)-24 UNC-2A X 1.00 LG	STN. STL.	8
6	92141A011	WASH FLT NO. 10(.190) X .44 OD X .03 THK	18-8 SST	4
5	05F7084	THERMO SENSOR -55 TO 105 DEGREE C	ELECTRONIC	2
4	31010101-200300	LONG DIPOLE COIL ASSEMBLY	COPPER/EPOXY	2
3	31010101-200100	CORE ASSEMBLY - MACHINING	SEE BOM	1
2	31010101-100102	MIRROR SHIELD, RIGHT	HRS 1006-1008	2
1	31010101-100101	MIRROR SHIELD, LEFT	HRS 1006-1008	2

SOURCE OR EQUIVALENT
T. H. HILSON
1761 S. NAPERVILLE RD.
WHEATON, IL 60187
1-630-665-3085

SOURCE OR EQUIVALENT
EMERSON + CUMMING
46 MANNING RD
BILLERICA, MA 01821
1-978-436-9700

SOURCE OR EQUIVALENT
MILLER-STEPHENSON
6348 OAKTON ST.
MORTON GROVE, IL 60053
1-847-966-2022

SOURCE OR EQUIVALENT
PORTGAGE ELECTRICAL
7700 FREEDOM AVE
NORTH CANTON, OH 44720
1-330-499-2727

SOURCE OR EQUIVALENT
McMASTER-CARR
P.O. BOX 4355
CHICAGO, IL 60680-4355
630-833-0300

SOURCE OR EQUIVALENT
NEWARK ELECTRONICS
1919 S. HIGHLAND AVE.
LOMBARD, IL 60148-6119
1-630-317-1000

Mark Jaski
Last edited on
November 23, 2004

Canted Undulator Magnets

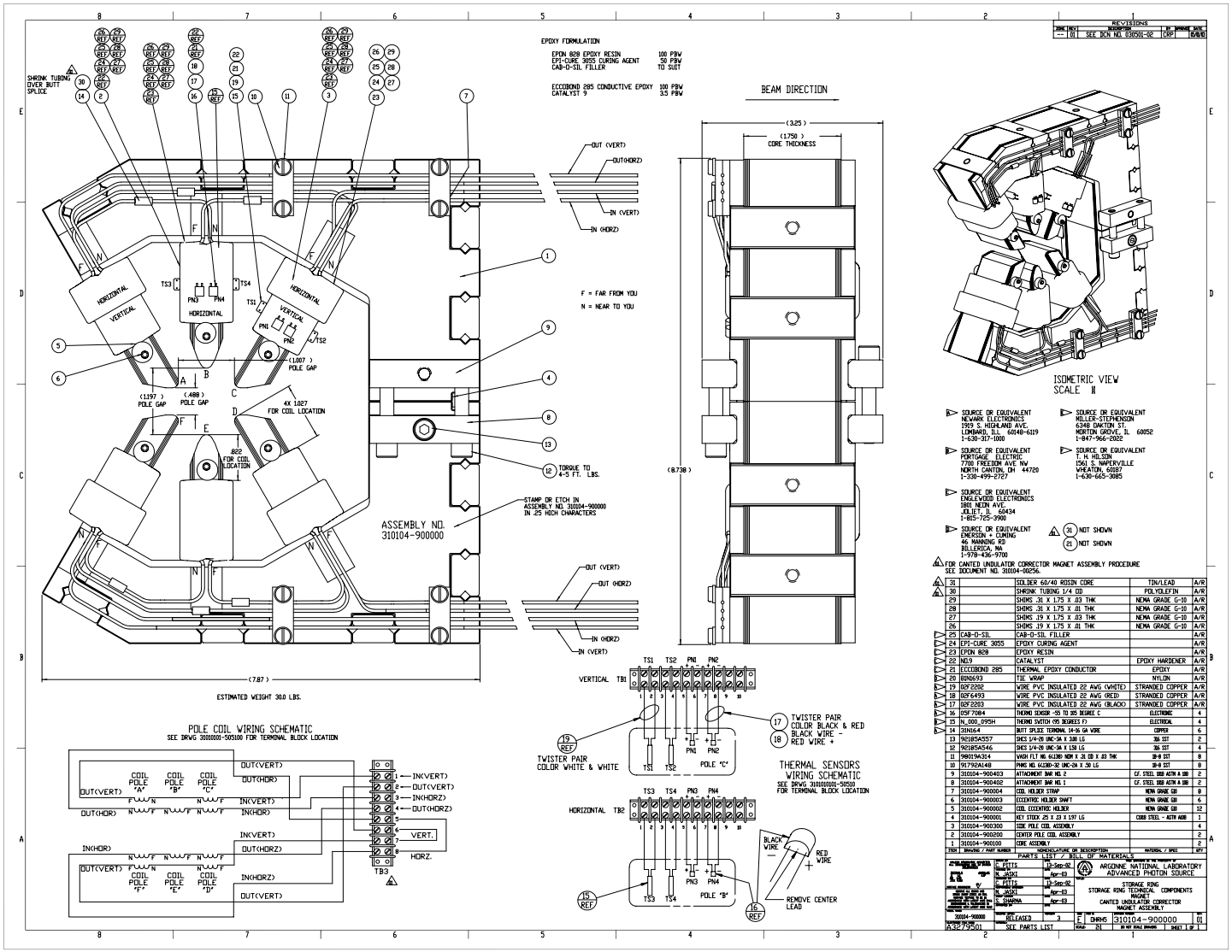

Mark Jaski
Last edited on
November 23, 2004

MECHANICAL ENGINEERING GROUP

ACCELERATOR SYSTEMS DIVISION

Advanced Photon Source
Argonne National Laboratory

Canted Undulator Magnets

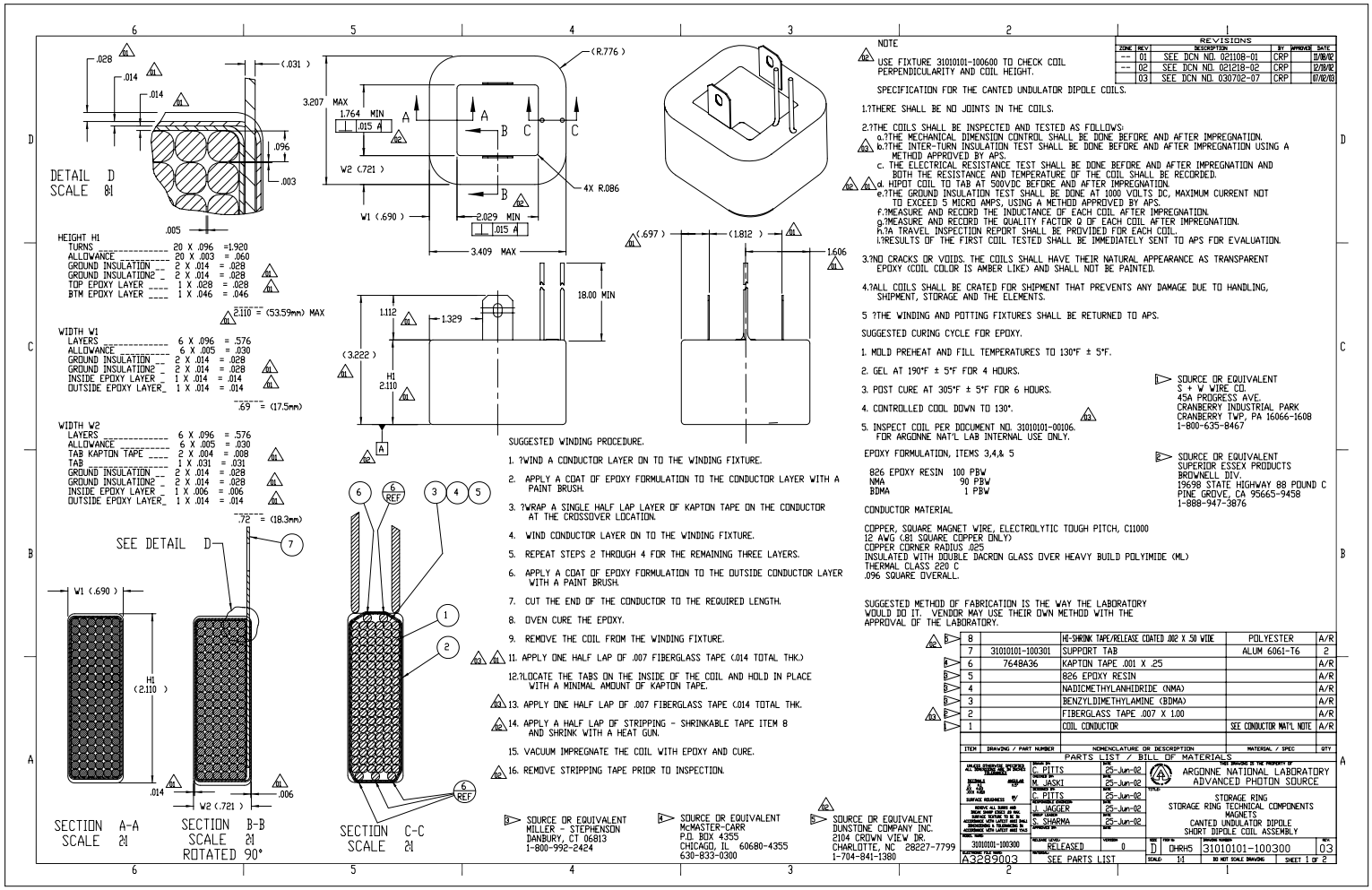

NOTE

USE FIXTURE 31010101-100600 TO CHECK COIL PERPENDICULARITY AND COIL HEIGHT.

SPECIFICATION FOR THE CANTED UNDULATOR DIPOLE COILS.

1.?THERE SHALL BE NO JOINTS IN THE COILS.

2.?THE COILS SHALL BE INSPECTED AND TESTED AS FOLLOWS:
a.?THE MECHANICAL DIMENSION CONTROL SHALL BE DONE BEFORE AND AFTER IMPREGNATION.
b.?THE INTER-TURN INSULATION TEST SHALL BE DONE BEFORE AND AFTER IMPREGNATION USING A METHOD APPROVED BY APS.
c. THE ELECTRICAL RESISTANCE TEST SHALL BE DONE BEFORE AND AFTER IMPREGNATION AND BOTH THE RESISTANCE AND TEMPERATURE OF THE COIL SHALL BE RECORDED.
d. HIPOT COIL TO TAB AT 500VDC BEFORE AND AFTER IMPREGNATION.
e.?THE GROUND INSULATION TEST SHALL BE DONE AT 1000 VOLTS DC, MAXIMUM CURRENT NOT TO EXCEED 5 MICRO AMPS, USING A METHOD APPROVED BY APS.
f.?MEASURE AND RECORD THE INDUCTANCE OF EACH COIL AFTER IMPREGNATION.
g.?MEASURE AND RECORD THE QUALITY FACTOR Q OF EACH COIL AFTER IMPREGNATION.
h.?A TRAVEL INSPECTION REPORT SHALL BE PROVIDED FOR EACH COIL.
i.?RESULTS OF THE FIRST COIL TESTED SHALL BE IMMEDIATELY SENT TO APS FOR EVALUATION.

3.?NO CRACKS OR VOIDS. THE COILS SHALL HAVE THEIR NATURAL APPEARANCE AS TRANSPARENT EPOXY (COIL COLOR IS AMBER LIKE) AND SHALL NOT BE PAINTED.

4.?ALL COILS SHALL BE CRATED FOR SHIPMENT THAT PREVENTS ANY DAMAGE DUE TO HANDLING, SHIPMENT, STORAGE AND THE ELEMENTS.

5 ?THE WINDING AND POTTING FIXTURES SHALL BE RETURNED TO APS.

SUGGESTED CURING CYCLE FOR EPOXY.

1. MOLD PREHEAT AND FILL TEMPERATURES TO 130°F ± 5°F.
2. GEL AT 190°F ± 5°F FOR 4 HOURS.
3. POST CURE AT 305°F ± 5°F FOR 6 HOURS.
4. CONTROLLED COOL DOWN TO 130°.
5. INSPECT COIL PER DOCUMENT NO. 31010101-00106. FOR ARGONNE NAT'L LAB INTERNAL USE ONLY.

EPOXY FORMULATION, ITEMS 3,4,& 5

826 EPOXY RESIN 100 PBW
NMA 90 PBW
BDMA 1 PBW

CONDUCTOR MATERIAL

COPPER, SQUARE MAGNET WIRE, ELECTROLYTIC TOUGH PITCH, C11000
12 AWG (.81 SQUARE COPPER ONLY)
COPPER CORNER RADIUS .025
INSULATED WITH DOUBLE DACRON GLASS OVER HEAVY BUILD POLYIMIDE (ML)
THERMAL CLASS 220 C
.096 SQUARE OVERALL.

SUGGESTED METHOD OF FABRICATION IS THE WAY THE LABORATORY WOULD DO IT. VENDOR MAY USE THEIR OWN METHOD WITH THE APPROVAL OF THE LABORATORY.

SUGGESTED WINDING PROCEDURE.

1. ?WIND A CONDUCTOR LAYER ON TO THE WINDING FIXTURE.
2. APPLY A COAT OF EPOXY FORMULATION TO THE CONDUCTOR LAYER WITH A PAINT BRUSH.
3. ?WRAP A SINGLE HALF LAP LAYER OF KAPTON TAPE ON THE CONDUCTOR AT THE CROSSOVER LOCATION.
4. WIND CONDUCTOR LAYER ON TO THE WINDING FIXTURE.
5. REPEAT STEPS 2 THROUGH 4 FOR THE REMAINING THREE LAYERS.
6. APPLY A COAT OF EPOXY FORMULATION TO THE OUTSIDE CONDUCTOR LAYER WITH A PAINT BRUSH.
7. CUT THE END OF THE CONDUCTOR TO THE REQUIRED LENGTH.
8. OVEN CURE THE EPOXY.
9. REMOVE THE COIL FROM THE WINDING FIXTURE.
11. APPLY ONE HALF LAP OF .007 FIBERGLASS TAPE (.014 TOTAL THK.)
12.?LOCATE THE TABS ON THE INSIDE OF THE COIL AND HOLD IN PLACE WITH A MINIMAL AMOUNT OF KAPTON TAPE.
13. APPLY ONE HALF LAP OF .007 FIBERGLASS TAPE (.014 TOTAL THK.
14. APPLY A HALF LAP OF STRIPPING - SHRINKABLE TAPE ITEM 8 AND SHRINK WITH A HEAT GUN.
15. VACUUM IMPREGNATE THE COIL WITH EPOXY AND CURE.
16. REMOVE STRIPPING TAPE PRIOR TO INSPECTION.

SOURCE OR EQUIVALENT
S + W WIRE CO.
45A PROGRESS AVE.
CRANBERRY INDUSTRIAL PARK
CRANBERRY TWP, PA 16066-1608
1-800-635-8467

SOURCE OR EQUIVALENT
SUPERIOR ESSEX PRODUCTS
BROWNELL DIV.
19698 STATE HIGHWAY 88 POUND C
PINE GROVE, CA 95665-9458
1-888-947-3876

SOURCE OR EQUIVALENT
MILLER - STEPHENSON
DANBURY, CT 06813
1-800-992-2424

SOURCE OR EQUIVALENT
McMASTER-CARR
P.O. BOX 4355
CHICAGO, IL 60680-4355
630-833-0300

SOURCE OR EQUIVALENT
DUNSTONE COMPANY INC.
2104 CROWN VIEW DR.
CHARLOTTE, NC 28227-7799
1-704-841-1380

REVISIONS

ZONE	REV	DESCRIPTION	BY	APPROVED	DATE
--	01	SEE DCN NO. 021108-01	CRP		11/08/02
--	02	SEE DCN NO. 021218-02	CRP		12/18/02
	03	SEE DCN NO. 030702-07	CRP		07/02/03

PARTS LIST / BILL OF MATERIALS

ITEM	DRAWING / PART NUMBER	NOMENCLATURE OR DESCRIPTION	MATERIAL / SPEC	QTY
8		HI-SHRINK TAPE/RELEASE COATED .002 X .50 WIDE	POLYESTER	A/R
7	31010101-100301	SUPPORT TAB	ALUM 6061-T6	2
6	7648A36	KAPTON TAPE .001 X .25		A/R
5		826 EPOXY RESIN		A/R
4		NADICMETHYLANHIDRIDE (NMA)		A/R
3		BENZYLDIMETHYLAMINE (BDMA)		A/R
2		FIBERGLASS TAPE .007 X 1.00		A/R
1		COIL CONDUCTOR	SEE CONDUCTOR MAT'L NOTE	A/R

ARGONNE NATIONAL LABORATORY
ADVANCED PHOTON SOURCE

TITLE: STORAGE RING STORAGE RING TECHNICAL COMPONENTS MAGNETS CANTED UNDULATOR DIPOLE SHORT DIPOLE COIL ASSEMBLY

C. PITTS 25-Jun-02
M. JASKI 25-Jun-02
C. PITTS 25-Jun-02
J. JAGGER 25-Jun-02
S. SHARMA 25-Jun-02

31010101-100300
RELEASED
D CHRH5 31010101-100300 03
A3289003 SEE PARTS LIST
SCALE: 1:1 DO NOT SCALE DRAWING SHEET 1 OF 2

Mark Jaski
Last edited on
November 23, 2004

MECHANICAL ENGINEERING GROUP

ACCELERATOR SYSTEMS DIVISION

Advanced Photon Source
Argonne National Laboratory

Canted Undulator Magnets

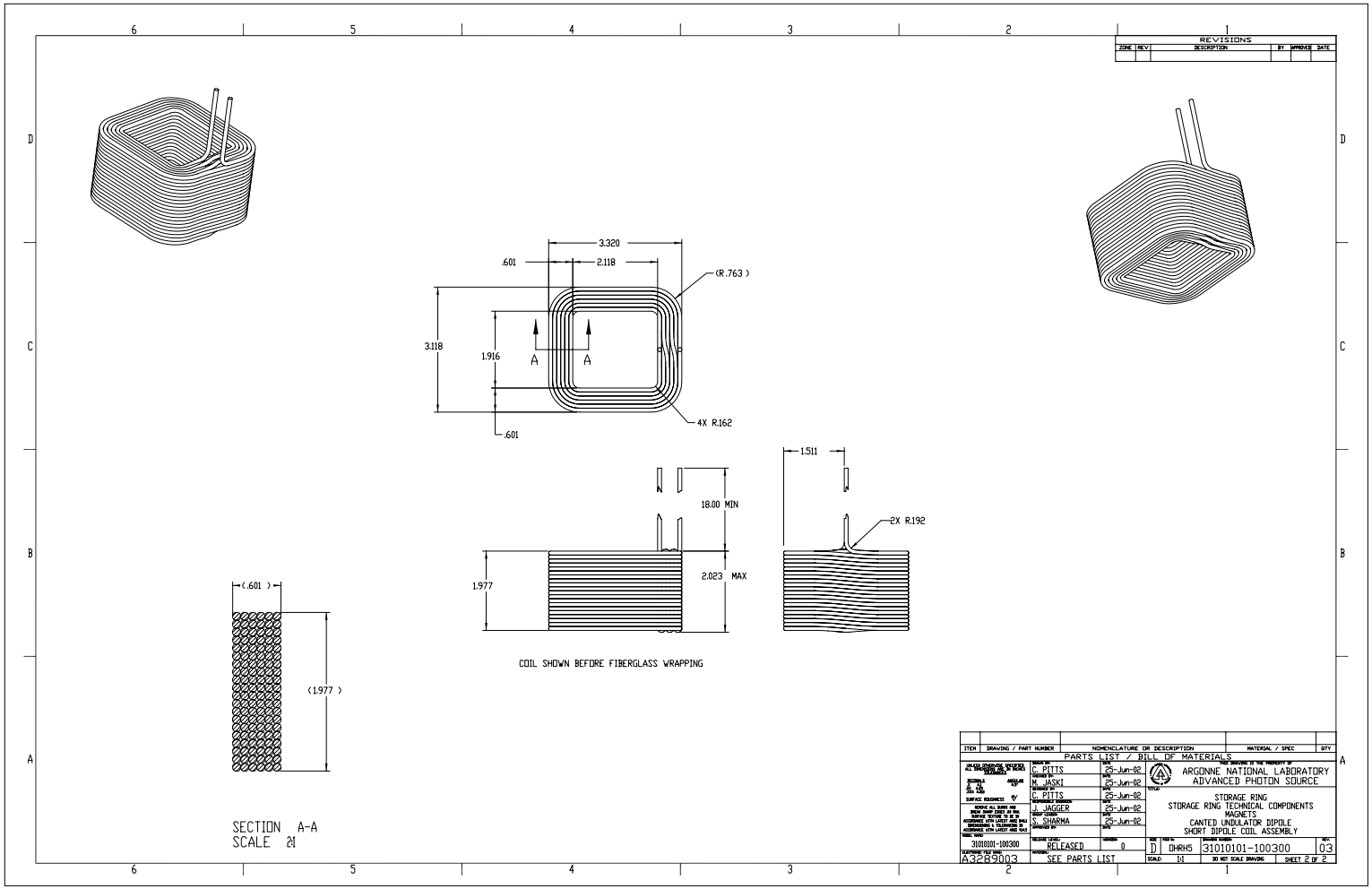

Mark Jaski
Last edited on
November 23, 2004

Canted Undulator Magnets

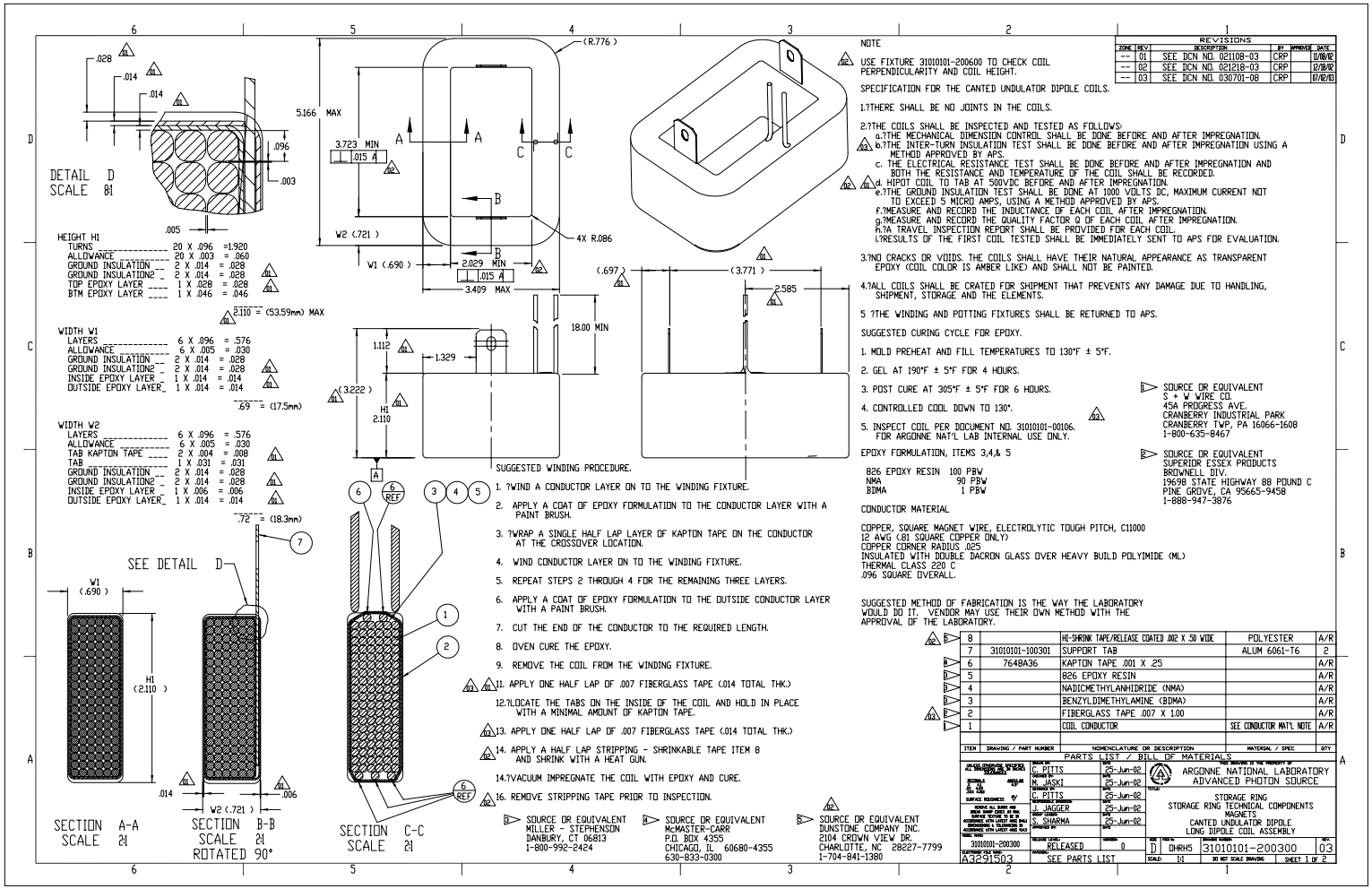

Mark Jaski
Last edited on
November 23, 2004

MECHANICAL ENGINEERING GROUP

ACCELERATOR SYSTEMS DIVISION

Advanced Photon Source
Argonne National Laboratory

Canted Undulator Magnets

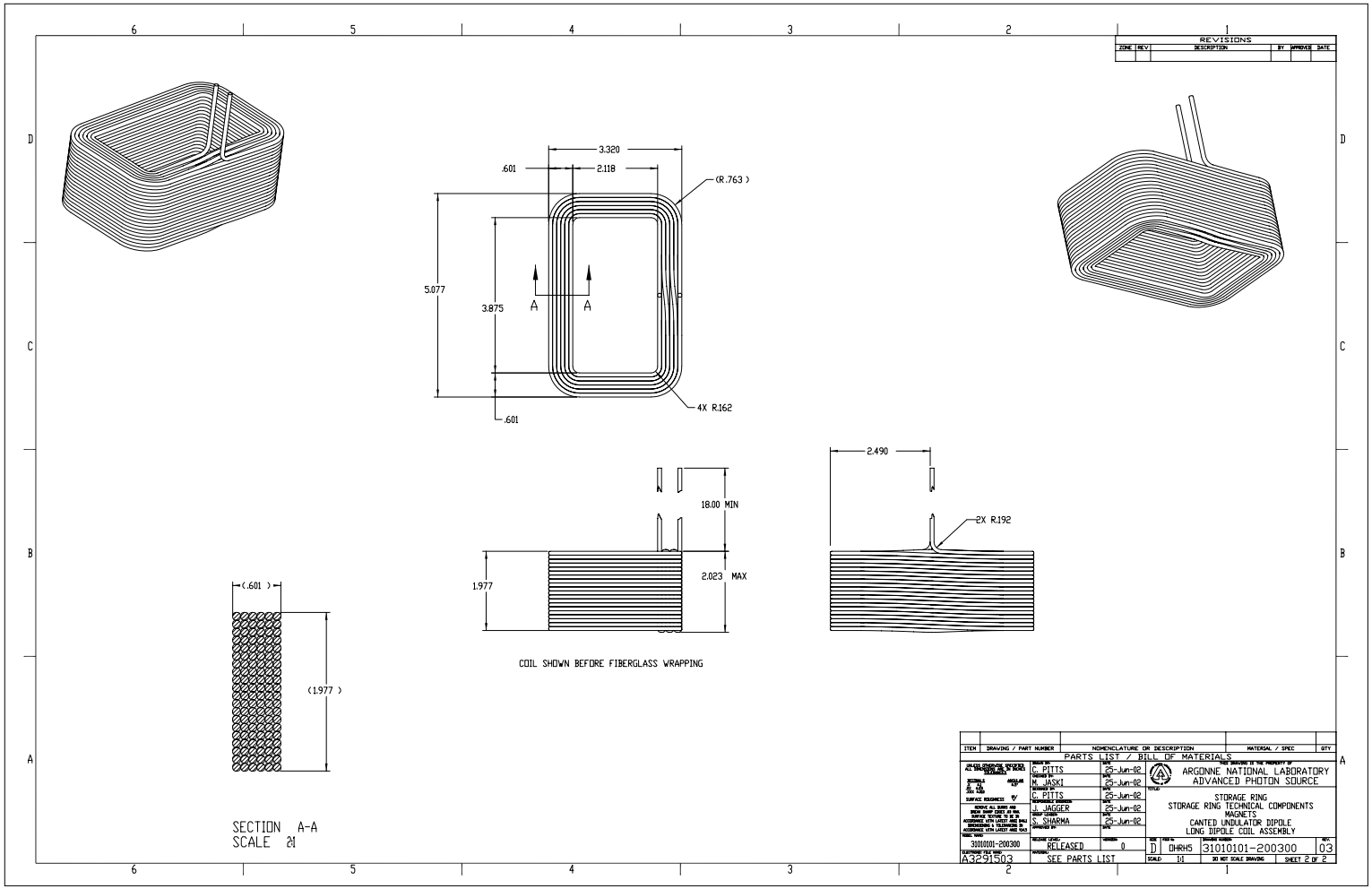

Mark Jaski
Last edited on
November 23, 2004

Canted Undulator Magnets

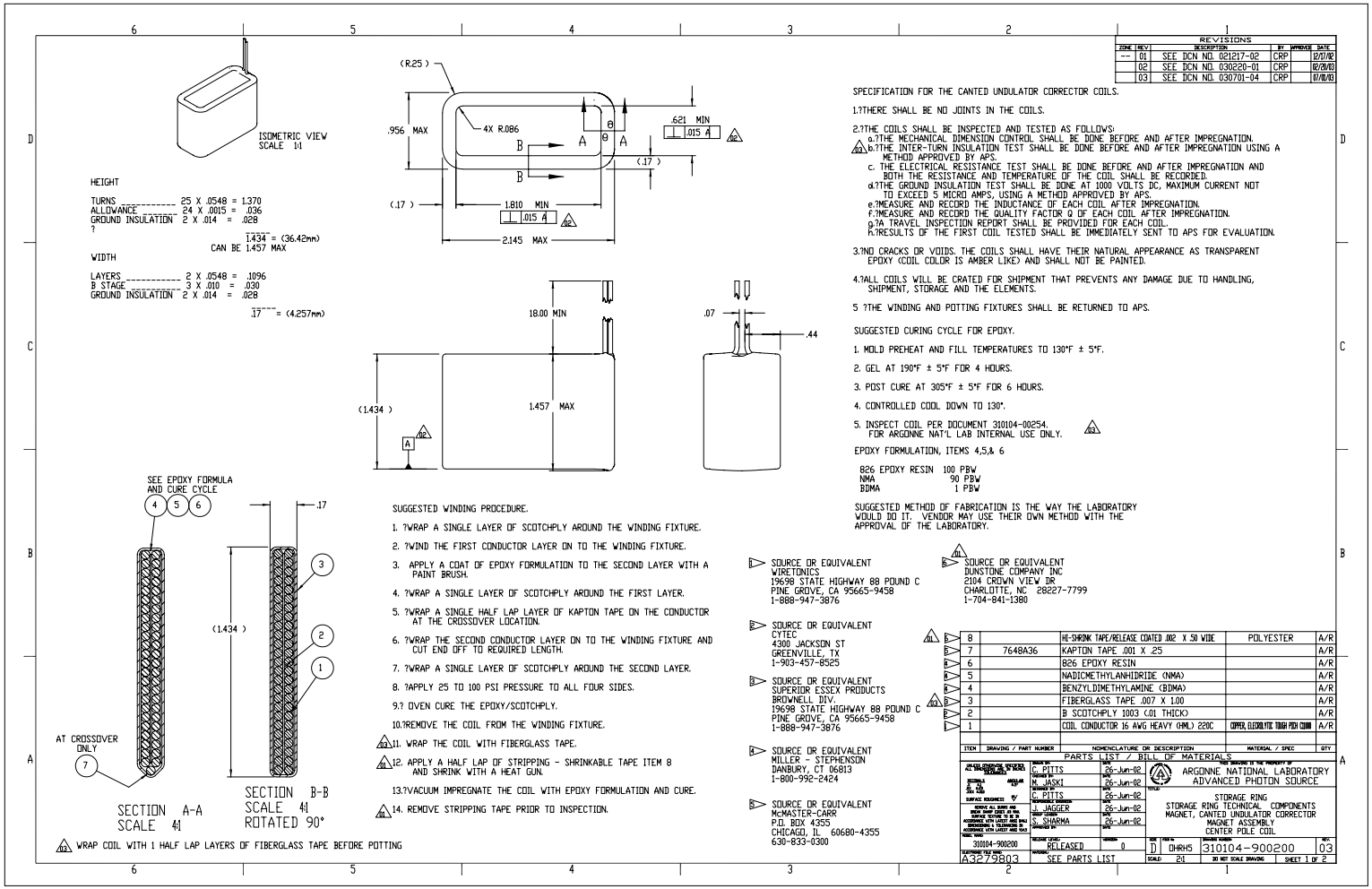

Mark Jaski
Last edited on
November 23, 2004

MECHANICAL ENGINEERING GROUP

ACCELERATOR SYSTEMS DIVISION

Advanced Photon Source
Argonne National Laboratory

Canted Undulator Magnets

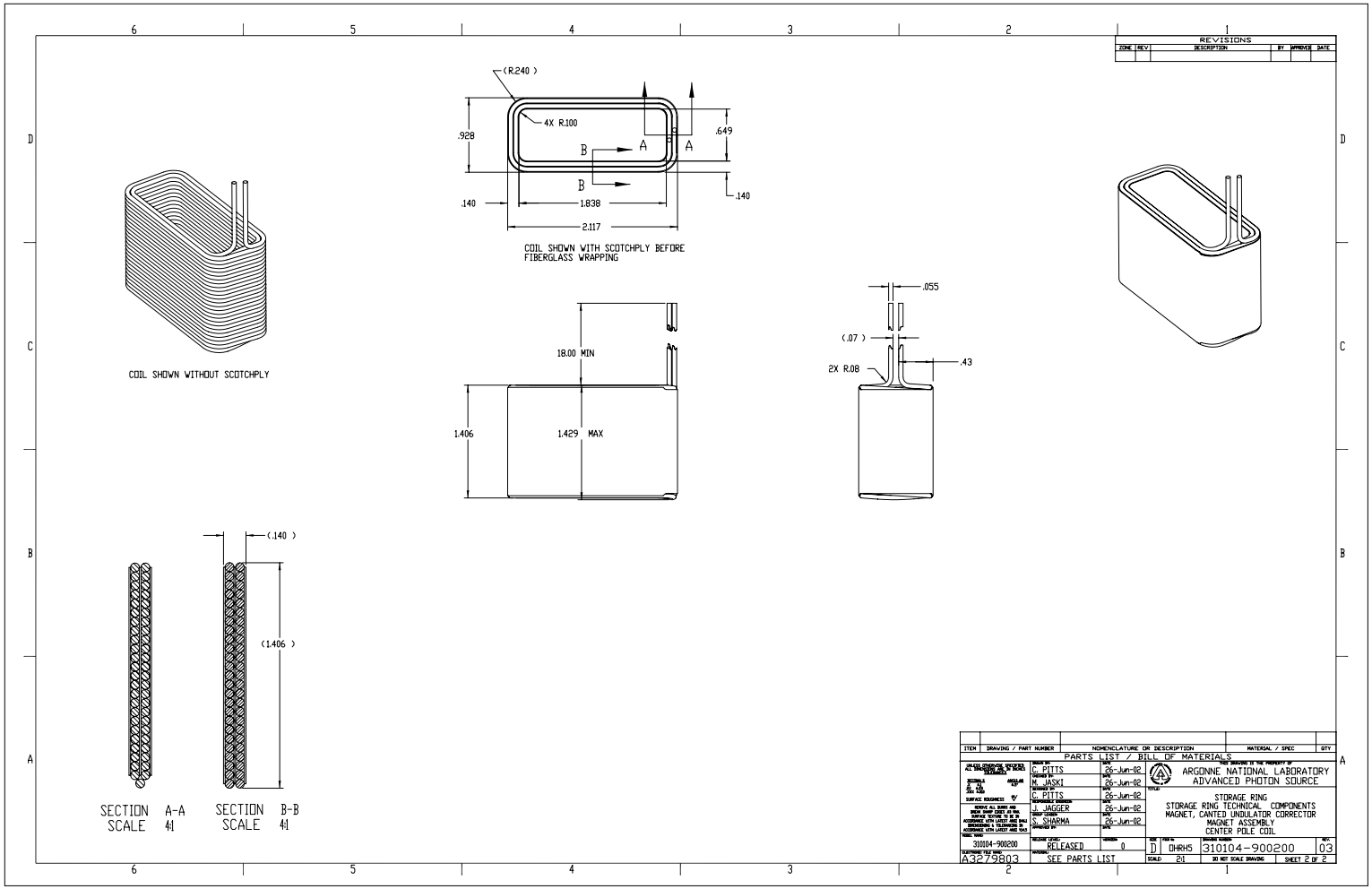

Mark Jaski
Last edited on
November 23, 2004

Canted Undulator Magnets

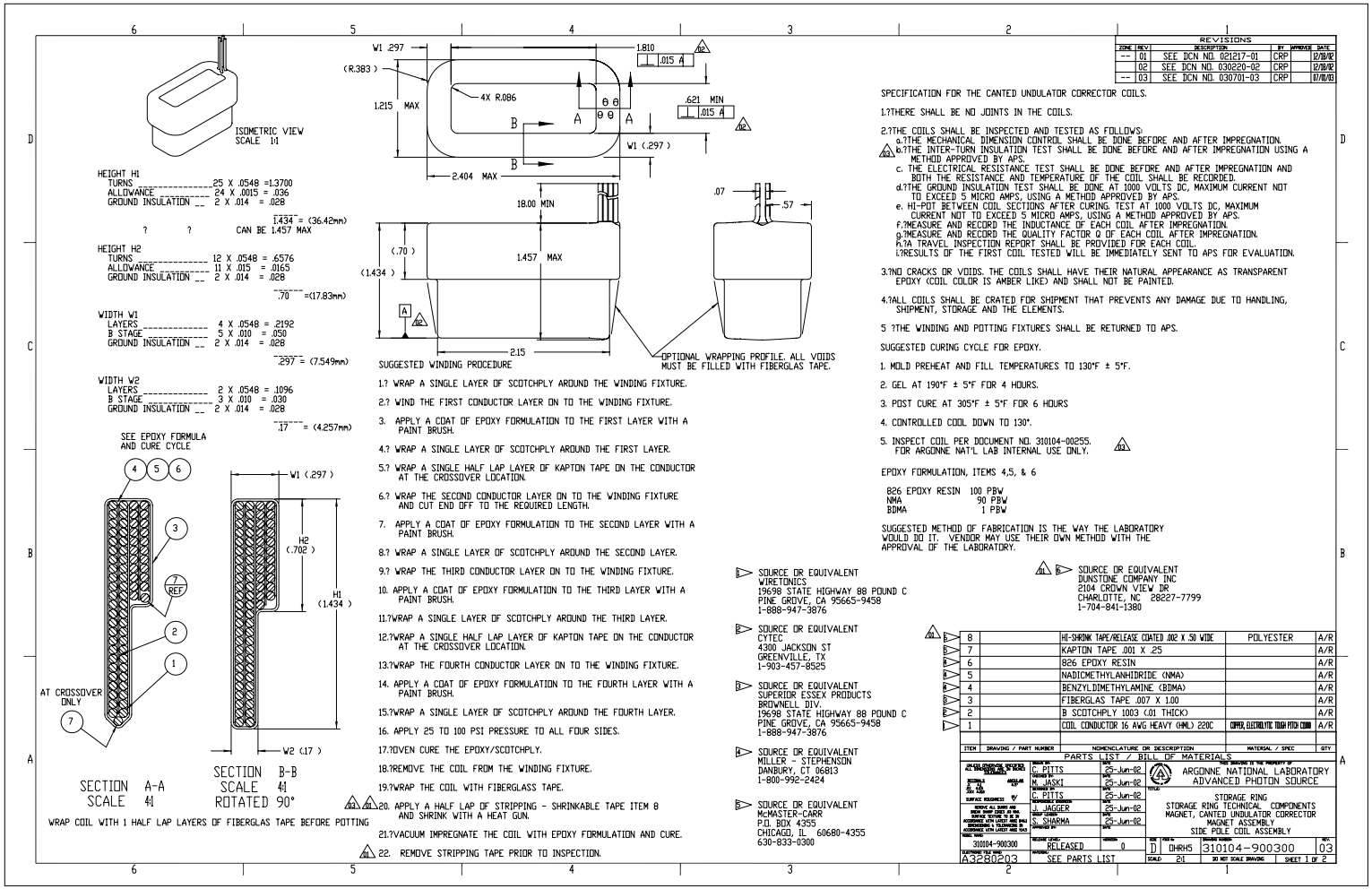

Mark Jaski
Last edited on
November 23, 2004

MECHANICAL ENGINEERING GROUP

ACCELERATOR SYSTEMS DIVISION

Advanced Photon Source
Argonne National Laboratory

Canted Undulator Magnets

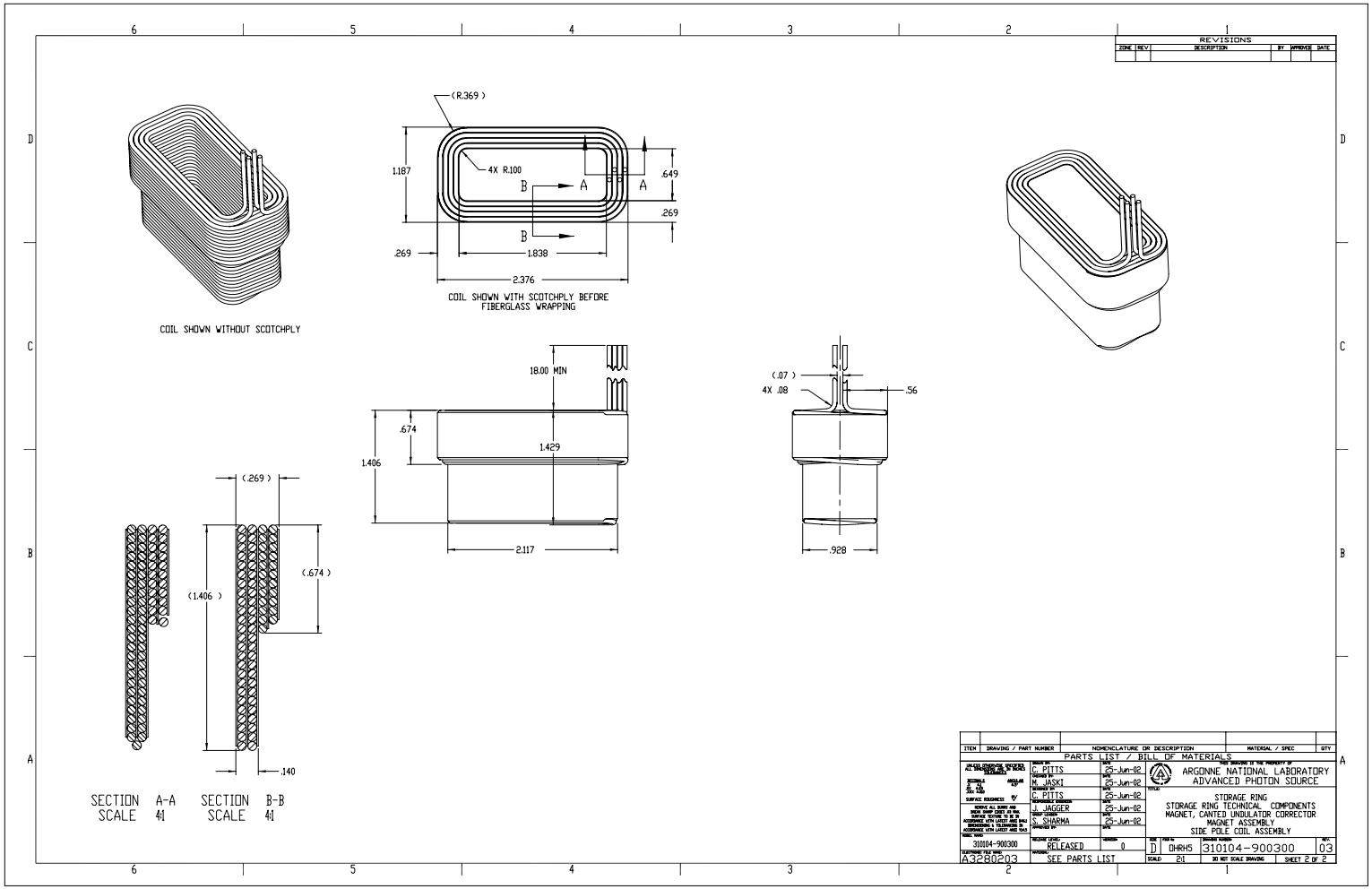

Mark Jaski
Last edited on
November 23, 2004