# Designing the mounting of a 9-cell Thermometry system for the ILC 9-cell Superconducting Radio Frequency Cavities

Ninoshka Fernandes

Lee Teng Summer Undergraduate Internship Program

Loyola University Chicago, Chicago

Fermi National Accelerator Laboratory

August 7, 2009

Prepared in partial fulfillment of the requirement of the Lee Teng Summer Undergraduate Internship Program, under the direction of mentor Aseet Mukherjee and supervisors Lance Cooley in the Technical Division and Eric Prebys in the Accelerator Physics Center at the Fermi National Accelerator Laboratory.

Participant: _____

Signature

Research Advisor: _____

Signature

## ABSTRACT

Designing the mounting of a 9-cell Thermometry system for the ILC 9-cell Superconducting Radio Frequency Cavities. Ninoshka Fernandes (Loyola University Chicago, Chicago, IL 60626) Aseet Mukherjee (Fermi National Accelerator Laboratory, Batavia, IL 60510).

The 9-cell Thermometry system will be used for Temperature Mapping of the International Linear Collider (ILC) 9-cell Cavities. Hence the design needs to be stable under very low temperatures like that of liquid helium (~2K). The existing design is inconsistent with the updated cavity mount and hence requires major revision. A key change to the existing design is to split the cage into four quarters instead of the two halves in order to fit the fixture into the cavity-mounting cage. This in turn requires increased longitudinal stiffness in the outer shell and a new design in order to connect the four quarters together. Also, the plates for the new shell need to be much thinner (½ inch). Since the plates are much thinner, they cannot be used for push-screws; instead we will use rivet nuts on the outer shell. We tested that the work well under repetitive heating and cooling cycles in liquid nitrogen. In addition to a "1-of-9"-cell design (to test any one cells), the full 9-cell design has been worked on. The 9-cell has even more challenges, the main one being how to fit all the nine cells together. The ½″ plates need to have slots on either side for the guiding PC boards. The cavity end cells need a modified PC board and plate design as the end cap disk interferes with it. Finally, the 9-cell cavities are not identical and when assembled together: they don't connect perfectly in a straight line as suggested in the drawings. Hence some clearance and flexibility is required to fit to the whole 9-cell cavity. The mounting of the 9-cell is a major issue while designing this model and hence is necessary to keep in mind.

**Introduction**:

The 9-cell Thermometry system will be used for Temperature Mapping of the ILC cavities. These systems are a good diagnostic tool for understanding the limitations in Superconducting Radio Frequency (SCRF) Cavities. The ILC uses SCRF cavities. Feeding RF power at the resonant frequency of the cavity builds up a very high electric field with very little power.

The SCRF cavities need to be built using superconducting material. For the ILC, the cavity is built using niobium and cooled to almost zero Kelvin. These cavities are very beneficial and widely used as they conduct electric current with minimum energy loss. Most of the energy is utilized to accelerate the beam. Currently, the ILC uses SCRF cavities based on a DESY (Deutsches Elektronen-Synchrotron) design for TESLA (Tera-eV Energy Superconducting Linear Accelerator) that has already been tested and found to work. As of now, the main goal is to increase the yield at the highest possible electric field to accelerate more charged particles to highest energies with the fewest cavities. Accelerators are used in many areas such as material research, cancer treatment and perhaps generating energy in the future. Hence, progress in the acceleration of charged particles and an increase in production yield within the SCRF cavities will benefit accelerator technology.

For the ILC, the thermometry system will be immersed in Liquid Helium and hence needs to be stable under low temperatures (~2K). Previous projects worked on the formation of a single cell system. However, this design was inconsistent with the updated cavity mount. Hence, a new design is needed. In addition to this, the existing design had some major flaws that need rectification as well.

The existing design had the fixture split into hemispheres. This design wouldn't fit between the support rods and so the fixture needed to be split into four quarters instead. In this manner, the fixture will fit the cavity better with room for adjustments. Along with this essential change, necessary alterations needed to be made – some of which already worked with the existing design.

Most of the single cell design details worked out well. However, there were a few that didn't. Firstly, the plates were too thick and secondly, there was too much stress on the sensor boards. Adjusting the plates to a thickness of ½″ rather than 1″ would suffice. For the sensor boards, the silicon diodes have been positioned away from the cavity avoiding excess stress. In addition, the division into quadrants reduces stress in the cards near the end of the fixture during installation.

Previous approaches to 9-cell thermometry use a small number of sensors, either mounted at selected points or mounted on a rotating arm to scan the cells. The method described here allows a high sensor density without moving parts.

**Materials/Methods**:

One of the key changes of splitting the fixture into four quarters affects the whole design. Firstly, the fixture would need more longitudinal stiffness, as the three posts in the existing design would not provide enough support to the fixture due to its almost linear configuration. Secondly, in the four-quarter cell design, the plates are too thin to push screws against the G10 boards. Thirdly, the guide plates cannot be joined together using screws that insert into the ¼" rods as they will be intersecting each other in the new design. New methods are needed for the design to work.

One of the ways to attach the four quarters together is to screw the quarter plates by cutting a region through the plastic. This would resolve the assembly issue. Now, since the plates are so thin, instead of using screws in the plates to push the G10 boards, "threaded rivets" in the circumferential G10 board can be used. They were tested and found to work well under repetitive heating and cooling cycles in Liquid Nitrogen and hence seem like a likely option. Also, in regard to longitudinal stiffness, instead of the three posts, lamination of the G10 boards would stiffen the outer shell and stabilize the design even more.

Another major issue that needs to be worked on is making this new design fit on the 9-cell cavity. The plates need to be modified so that the PC boards can fit into the slots perfectly. Also, the end cap disk of the 9-cell cavity mount interferes with the pattern of the 9-cell and hence special adjustments need to be made to the plate and PC board design at the ends.

**Results**:

Figure 1 shows the top, middle, and bottom view of the thermometry cage design in AutoCAD®. The design that is in black is the original visible design. The green are the hidden lines. The red belong to the parts section of the design like screws and washers. The blue lines represent the dimensions for the various objects in the drawing.

Figure 2 depicts the radial view of the cage design in AutoCAD®. The little brown tabs around the arc carry the silicon diode sensors. The green section of the drawing is the PC board along with white connectors sticking out in the left corner. The 1/8″ piece of PC board extending out at either ends is the connection region for the plate.

Figure 3 shows the plate design in 3D. The plate is in gray. The ribbed sections visible toward the bottom of the plate are the slots created for inserting the PC board's 1/8″ attachment. Also visible are the red screws inserted within the plastic cut-out.

Figure 4 displays a quarter view of a "1-of-9"-cell. As seen, the transparent objects are the plates with slots that are 3/16″ in depth. The green parts are the PC boards with the diodes along the arc and the connectors at the end.

Figure 5 & 6 illustrate the 9-cell thermometry design in AutoCAD® 3D with and without PC boards respectively. The disk on the either end of the cavity is the end cap flange intended to hold the mount. The objects in green are the PC boards with plates at either end.

Figure 7 focuses on the end cap disk inserted at the two ends of the cavity. Figure 8 illustrates the guide plate for 9-cell drawing in AutoCAD® and Figure 9 shows a modified end guide plate around a single cell along with the end cap disk in AutoCAD®. Figure 10 shows a PC board specifically altered to fit the left end of the cavity. Figure 11 depicts the whole 9-cell drawings – the upper one is a clipped version of the 9-cell and the lower one is an angled view of the 9-cell highlighting the end cell details.

**Discussion & Conclusion**:

The designs in Figure 1 through 4 are complete. The initial problem of joining the four quarter units together has been solved. Screws are being used to connect the four quarters together by cutting through the plastic. "Threaded" rivet nuts are being used to push the G10 boards. Lamination of the G10 boards (G10-Rohacell-G10) provides longitudinal stiffness and overall support for the fixture. The "1-of-9"-cell design is all set.

However, those are only the designs pertaining to the "1-of-9"-cell. The main goal is to design the whole 9-cell thermometry system and hence the designs in Figure 5 through 11 are mainly complete but need minor adjustments. Some of the problems with the 9-cell design have already been resolved. The initial problem was how to connect the PC boards to the plastic. Since the plastic is only ½″ thick, there is not much room for creating slots and inserting the PC boards. The solution was to trim the insertion region on the PC board to 1″ instead of the whole length of the board. In this way, the slots wouldn't interfere with the screws in the plastic and they would fit reasonably well. In this design, the slots are 3/16″ deep whereas the actual length of the board's extension region is 1/8″ thick. This leaves about 1/16″ clearance within the slot for adjustments.

The current major problem that we are encountering has to do with the ends of the cavity. The end cap disk (as seen in Figure 7) interferes with the plastic and the PC boards (as seen in Figure 6). As of now, we have expanded the plastic's inner diameter to the disk's outer diameter. This change affects

the board's attachment region. So a modified design is necessary for the end boards. Figure 8 & 9 portray the current modified design for the end plates whereas Figure 10 illustrates the adjusted design for the boards. The end plates don't have room for screwing the plastic together. Hence an extension to the plastic can connect the four parts together or a band tied around the whole end plate can hold it in place. The end boards are all set unless some adjustments are made to the end plates. Figure 11 shows the currently completed 9-cell drawings. As seen in Figure 11, the laminated boards surround the cells. These laminated boards need to be set in place around the shell and hence we need to create a design in order to do so.

Mounting the 9-cell is also a major issue when creating the design. One of the major drawbacks is that all the 9-cell cavities are not identical and when connected, they do not assemble in a straight line. This is very different from the 3D drawings. Hence some clearance is needed in the drawings so that we can make the necessary adjustments when building it. Once this 9-cell thermometry system 3D drawing is entirely complete, we can actually go ahead and start building it and try it out as a unit in Liquid Nitrogen. If it doesn't work, then we would have to come up with an alternate design.

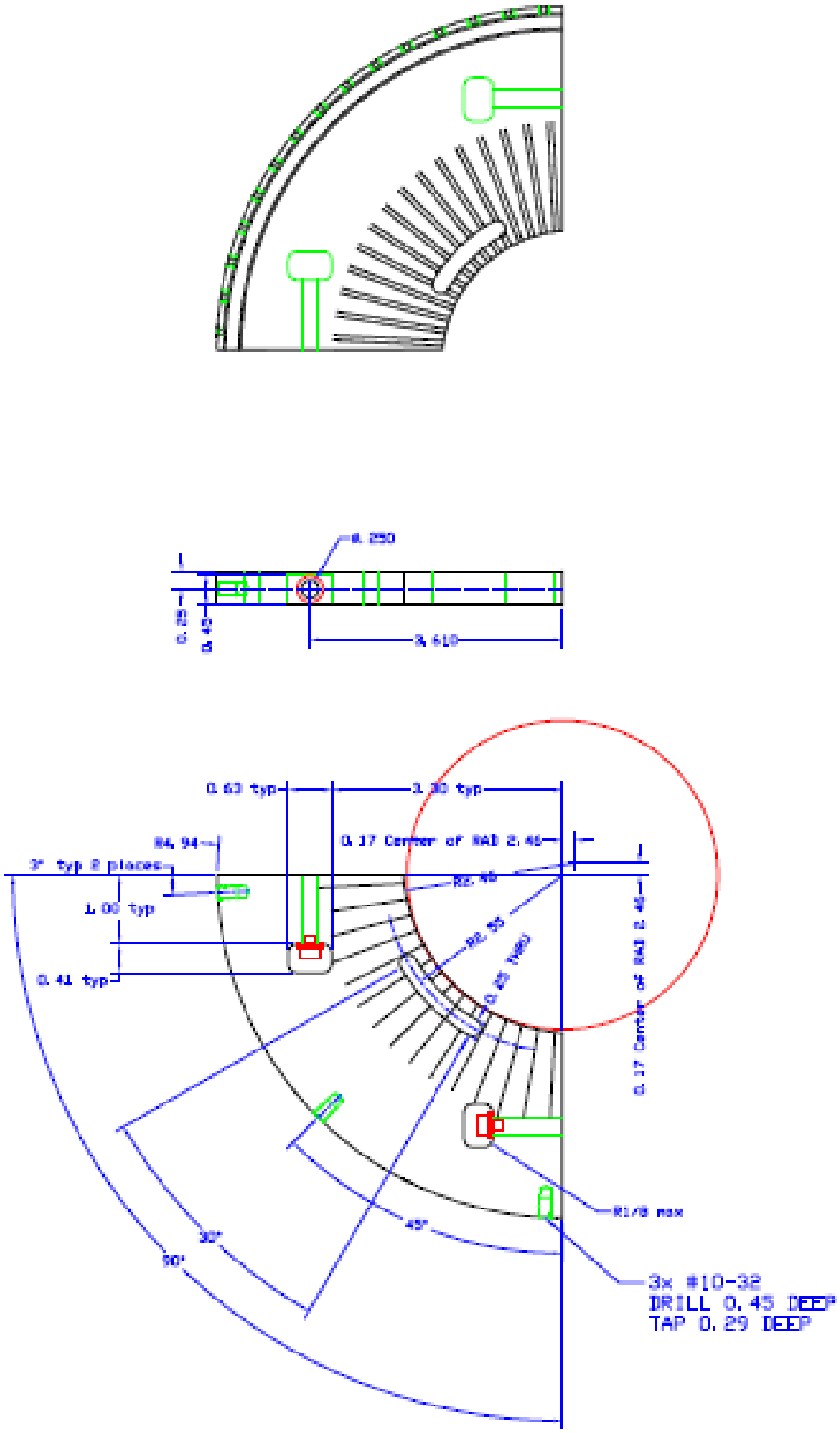


Figure 1: Plastic Guideplate Design in AutoCAD®

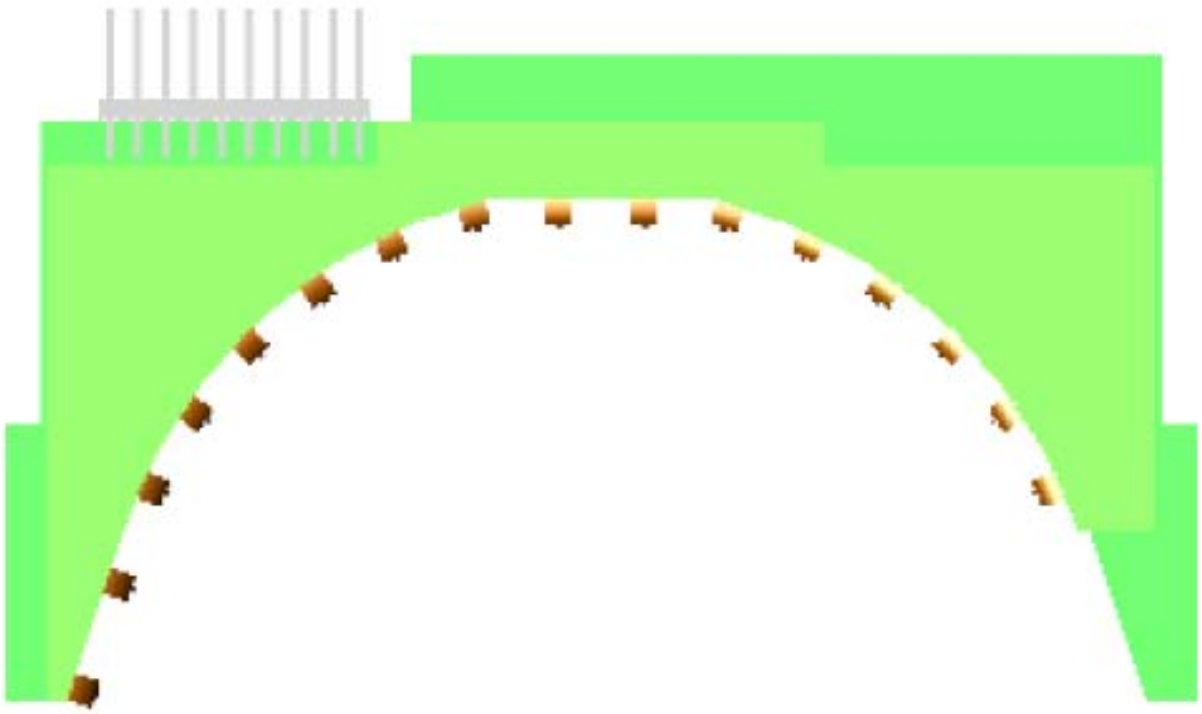

Figure 2: Radial Board Base

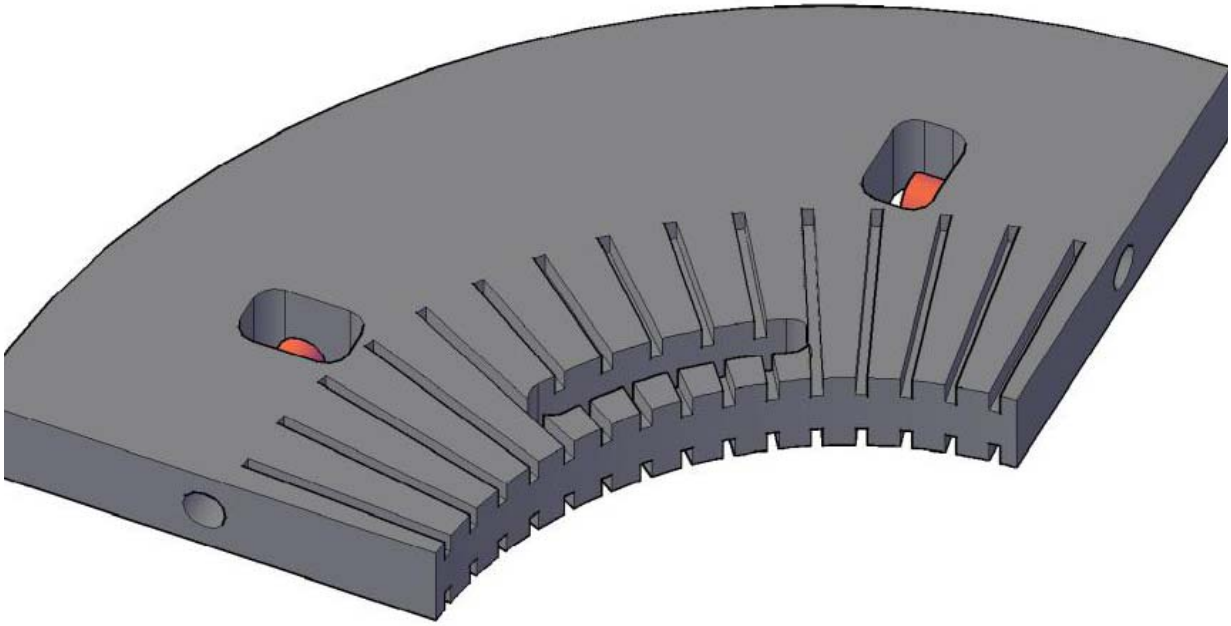

Figure 3: Plate Design in 3D

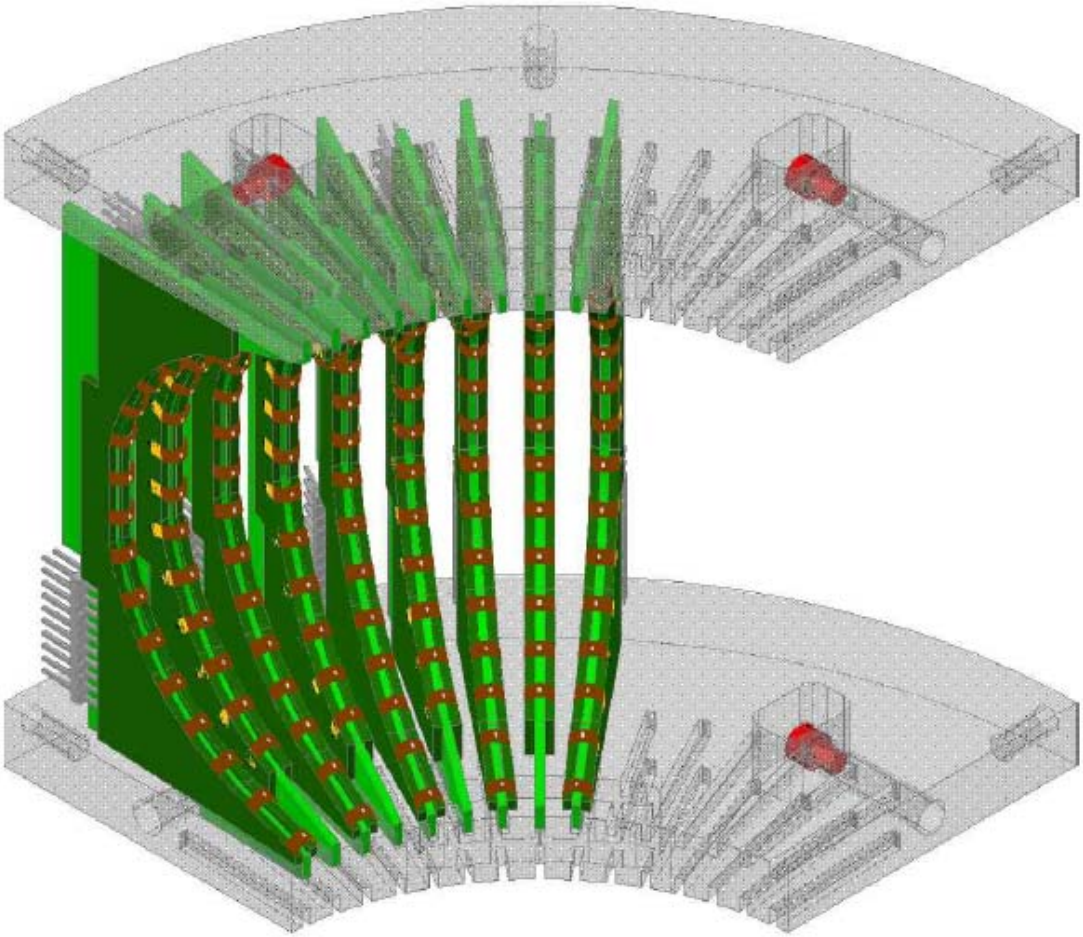

Figure 4: Composite 3D drawing of a “1-of-9”-quarter-unit

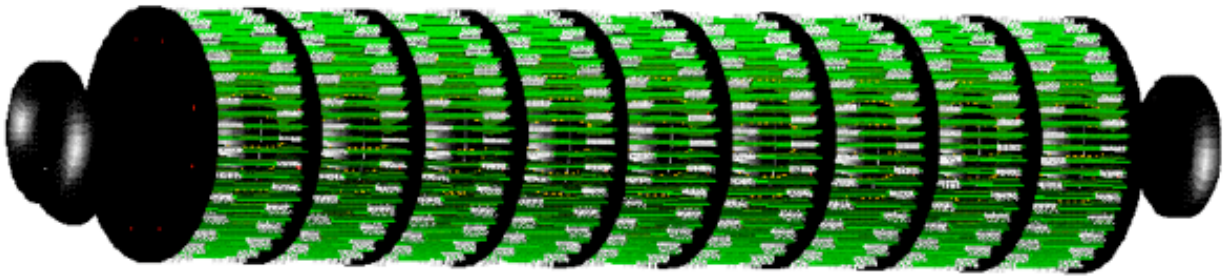

Figure 5: 9-cell Cavity Model in 3D

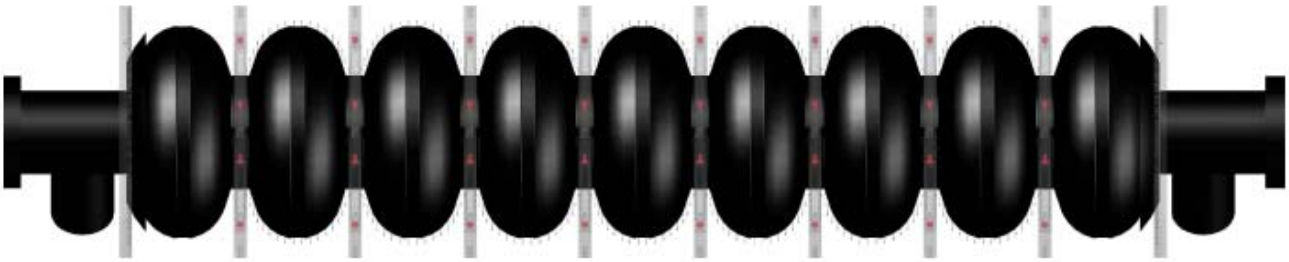

Figure 6: 9- cell Cavity Model in 3D without PC boards

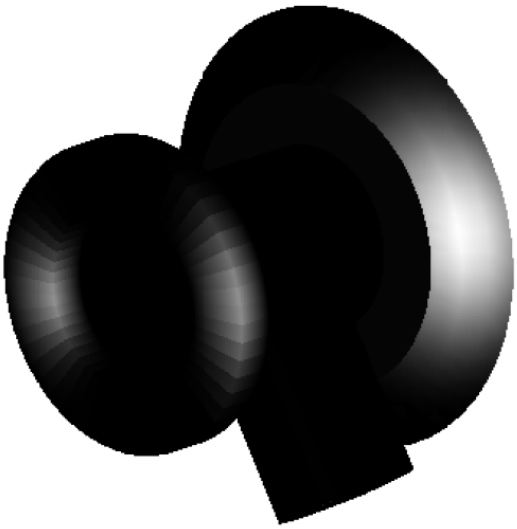

Figure 7: End cap disk for the Cavity

Figure 8: Guide Plate Design in 3D for the 9-cell

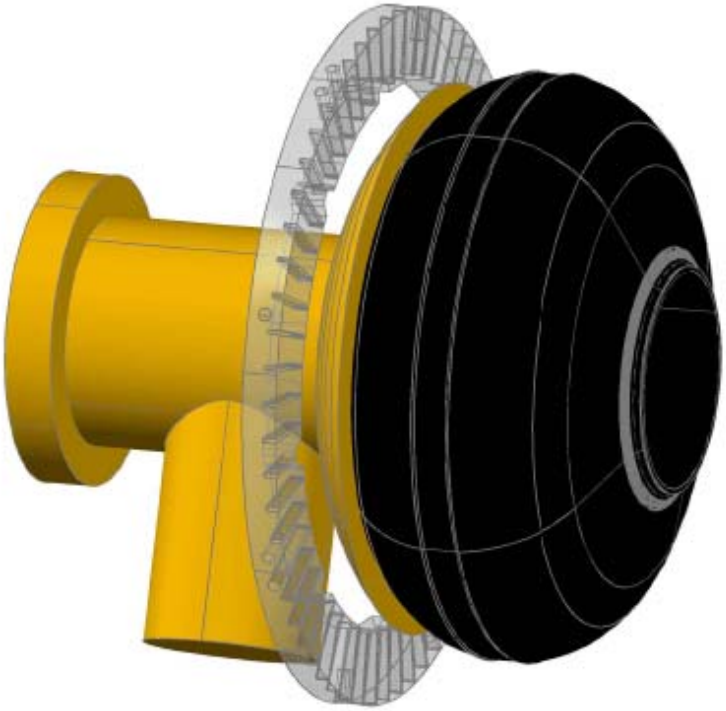

Figure 9: End guide plate around a single cell in 3D

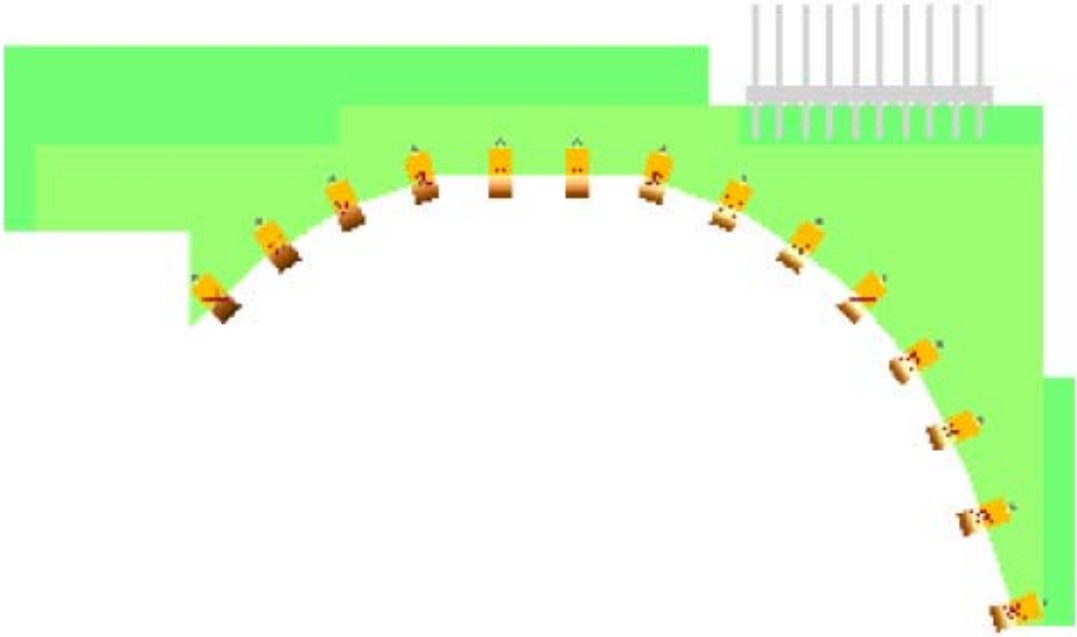

Figure 10: Radial Board Base Left End cell of Cavity

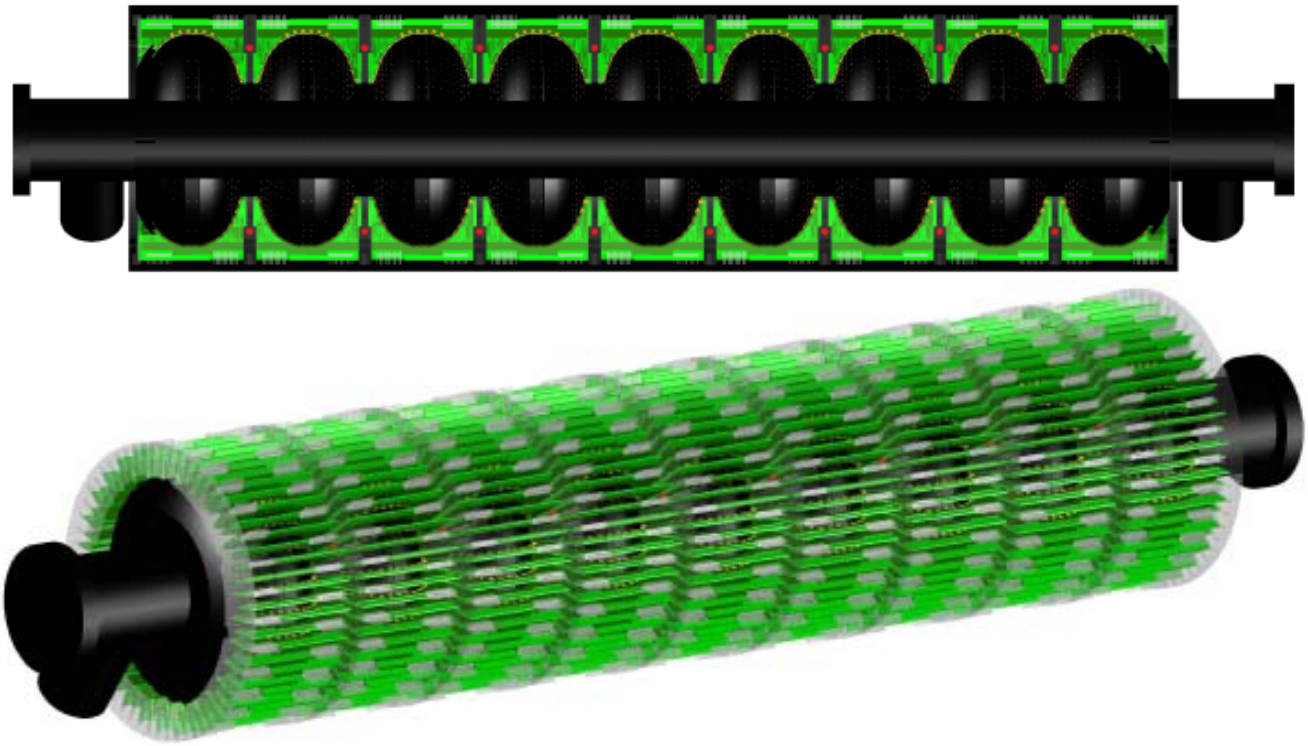

Figure 11: 9-cell Design

**Acknowledgment**

I would like to thank my mentor, Dr. Aseet Mukherjee, for his help, guidance, support, and advice throughout this internship. I am also extremely grateful to Dr. Eric Prebys and Dr. Linda Spentzouris and the whole Lee Teng Committee for this wonderful opportunity as well as my co-supervisor, Dr. Lance Cooley, Carol Angarola, and all the interns for making this internship an educational and enjoyable experience.

**References:**

[1] Padamsee, Hasan. *RF Superconductivity for Accelerators*. New York: Wiley, 1998.

[2] G. Ciovati et al., *Temperature Mapping System for Single Cell Cavities,* JLAB Tech Note TN-05-59 (2005)

[3] Canabal et al., *Development of a Temperature Mapping System for 1.3 GHz 9-cell SRF Cavities,* WEPMS031 Proceedings of PAC07, Albuquerque, New Mexico, USA

[4] URL: http://www.linearcollider.org/

[5] URL: http://srf.jlab.org/JLabILCinfo/PDFs/ILC0908Mtg/Experience_with_Tmapping_Ciovati.pdf