LS-58
April 22, 1986

AN UNREINFORCED VACUUM CHAMBER FOR THE 6-GeV INJECTOR SYNCHROTRON

W. F. Praeg

An Unreinforced Vacuum Chamber for the 6-GeV Injector Synchrotron

W. F. Praeg

Summary

The elliptical vacuum chamber of the injector synchrotron, as described in the Conceptual Design Report (CDR), ANL-86-8, is made from stainless steel tubes reinforced by thin ribs. A simpler design is proposed and analyzed which not only reduces the cost by 74%, but also is easier to install, bake, and pump.

Introduction

The elliptical vacuum chamber for the 6 GeV injector synchrotron described in the CDR ANL-86-8 is made from 0.3-mm thick stainless steel (SS), reinforced by ribs spaced 20-mm apart. Its design is based on a chamber developed for the 9 GeV synchrotron DESY II which operates with a 12.5-Hz repetition rate (DESY I used a ceramic vacuum chamber for 50 Hz operation). The CDR synchrotron has a 1-Hz repetition rate; however, its sextupole magnets must be capable of field changes at a rate up to three times faster than the dipole magnets. At these frequencies, it appears feasible to replace the DESY II type design with an unreinforced SS-chamber of 1-mm wall thickness and it may even be possible to use a 2-mm thick aluminum (AL) chamber.

The magnetic fields during acceleration will induce eddy currents in the metallic vacuum chamber. These currents cause distortions of the field inside the vacuum chamber and power losses in the chamber walls. This note reports on the effects of eddy currents in unreinforced vacuum chambers made from SS and AL.

1. Magnetic Field

The solid line in Fig. 1 shows the nominal shape of the synchrotron ring magnet current; the dashed 1-Hz curve, $i = I_{dc} - I_{ac} \sin(\omega t + \theta)$, is a good fit for it. For the sextupoles, the rate of current change during acceleration may be up to three times faster than for the other magnets. Therefore, eddy current effects in the vacuum chamber must be negligible for frequencies $\lesssim$ 3 Hz.

2. Eddy Current Effects in an Unreinforced SS-Chamber

Figure 2 shows the cross-section of a proposed unreinforced SS-chamber for the injector synchrotron that can support an interior vacuum. Its eddy current shielding effects will be estimated by approximating it with cylinders. For vertical fields, the inside radius is r_i = 3.0 cm, for horizontal fields it is 1.75 cm with a wall thickness of d = 0.1 cm. Due to eddy currents in the chamber wall, a uniform external field H_o is attenuated and phase shifted resulting in a field H_i inside the vacuum chamber. The attenuation a_s of a cylinder is defined by

$$a_s = \ln \left| \frac{H_o}{H_i} \right| \tag{1}$$

From Ref. (1), we obtain

$$a_s = \frac{1}{2}\ln\Big[\Big(\frac{r_i}{2\delta}\Big)^2\Big(\cosh\frac{2d}{\delta} - \cos\frac{2d}{\delta}\Big) + \frac{r_i}{2\delta}\Big(\sinh\frac{2d}{\delta} - \sin\frac{2d}{\delta}\Big) + \frac{1}{2}\Big(\cosh\frac{2d}{\delta} + \cos\frac{2d}{\delta}\Big)\Big]. \tag{2}$$

where

$\delta = \left(\frac{\rho}{\mu\pi f}\right)^{1/2}$, depth where field is reduced to 1/e of surface field,

ρ = resistivity, $\mu\Omega$cm,

$\mu = 0.4\pi \times 10^{-8}\,\Omega s cm^{-1}$,

f = frequency s^{-1}.

For low frequencies ($d < \delta$), Eq. (2) can be simplified to

$$a_s = \frac{1}{2}\ln\left[1 + \left(\frac{r_i d}{\delta^2}\right)^2\right]. \qquad (3)$$

For SS type 316, which has low magnetic susceptibility and is suitable for welding and brazing the resistivity at 20°C is $\rho = 75\mu\Omega$cm. This corresponds to a skin depth $\delta = 43.3/\sqrt{f}$.

The attenuation of the dipole field as calculated from Eq. (3) is shown in Table I for various frequencies. This table also shows the phase shift and eddy current losses as calculated with computer program PE2D by R. Lari. An SS-chamber as shown in Fig. 2 satisfies the requirements for the injector synchrotron; it will have negligible eddy current effects.

Table I

Frequency Response of SS-Chamber of Fig. 1

f	1	2.5	12.5	62.5	Hz
δ	43.3	27.3	12.3	5.47	cm
a_s	$\leq 1+1.3\times10^{-8}$	$\leq 1+8.0\times10^{-8}$	$\leq 1+2.0\times10^{-6}$	$\leq 1+5\times10^{-5}$	$\ln\left\lvert\frac{H_o}{H_i}\right\rvert$
$\left\lvert\frac{H_i-H_o}{H_o}\right\rvert$	$\sim 1.3\times10^{-8}$	$\sim 8.0\times10^{-8}$	$\sim 2.0\times10^{-6}$	$\sim 5\times10^{-5}$	relative error
$\angle H_o, H_i$	≤ 0.009	≤ 0.020	≤ 0.102	≤ 0.510	degree
P (B_o=4.09kG)	0.0028	0.0176	0.439	10.9	W/cm

For horizontal correction fields, the eddy current effects will be even smaller because the chamber height is ~ 40% smaller.

3. Eddy Current Effects in an Unreinforced AL-Chamber

For an AL-chamber having a shape as shown in Fig. 2, a wall thickness of 0.2 cm is required to support a vacuum (the chamber's safety factor was calculated by R. Wehrle as 1.8). For aluminum with $\rho = 2.78 \mu\Omega$cm, the skin depth is $\delta = 8.38/\sqrt{f}$. For a 1-Hz field, the eddy current response is shown below:

$\left\lvert (H_i - H_o)/H_o \right\rvert$	$\angle H_o, H_i$	P at 4.09 kG
2.9×10^{-5}	$\leq 0.45°$	0.162 W/cm

For frequencies of 2.5, 5, and 15 Hz, the power losses at 4.09 kG are 1.01, 4.05, and 36.0 W/cm respectively. However only the sextupole field has higher frequency components and their magnitude is much smaller than the 1-Hz dipole field of 4.09-kG. For a given chamber geometry, eddy current losses are proportional to the square of the magnetic field H_o, the square of the frequency f, and inversely proportional to the resistivity ρ,

$$P \propto H_o^2 f^2/\rho. \tag{4}$$

Therefore, the eddy current losses of 1.01 W/cm calculated for 2.5 Hz at 4.09 kG are much larger than what will be experienced during actual operation. For example, a 2-kG field change at 2.5 Hz would produce eddy current losses of only 1.01 W/cm $(2/4.09)^2$ = 0.24 W/cm. From Fig. 1, we see that acceleration takes place during 1/3 of a synchrotron cycle, therefore, the higher frequency sextupole field will be present for less than 1/3 s thereby reducing the 2.5-Hz, 2-kG power losses to < 0.136 W/cm. In addition, the sextupoles occupy only a small fraction of the total length of the vacuum chamber. Eddy current losses in the aluminum chamber are estimated to be $\lesssim$ 0.3 W/cm, which is acceptable.

The field error due to eddy current shielding is shown in Fig. 3 as a function of the distance from the center of the vacuum chamber. This error is

proportional to the square of the frequency. The phase shift between the uniform dipole field on the outside of the chamber, H_o, and the field inside the vacuum chamber, H_i, is shown in Fig. 4. The phase shift changes linearly with frequency.

An AL-chamber is much inferior to an SS-chamber.

4. Cost Estimates

John Moenich made detailed cost estimates for unreinforced SS and AL vacuum chambers similar to the one shown in Fig. 2. As shown in Tables II and III, their respective costs are $443k and $398k which are much less than the $1712k estimated by him for the reinforced SS-vacuum chamber in the CDR.

5. Conclusion

An unreinforced SS-vacuum chamber, as shown in Fig. 2, should be used for the injector synchrotron because it costs only 11% more than an AL-chamber and it is much superior electrically. The SS-vacuum chamber is 74% less expensive than the reinforced SS-vacuum chamber in the CDR (a savings of ~ $1200k) and it is much easier to install, bake-out, and pump.

Reference

1. W. F. Praeg, "Resistivity, Hysteresis, and Magnetization of 9% Cr Stainless Steel as a Function of Temperature and Its Electromagnetic Shielding Effects in Cylindrical Structures," Proceedings of the 8th Symposium on Engineering Problems of Fusion Research, IEEE Pub. No. 79CH1441-5 NPS, Volume IV, pp. 1817-22, (November 13-16, 1979).

Table II

Cost Estimate for SS-Vacuum Chamber per Fig. 2 for the Injector Synchrotron

1.	Tubing (2" O.D. x 0.035" wall)	$2,000.00
2.	Flanges:	
	a. 4 1/2" OD Conflat	6,000.00
	b. 3 3/8" OD Conflat	2,175.00
	c. 2 3/4" OD Conflat	975.00
	d. 1 1/3" OD Conflat	3,744.00
3.	Carbide Die and Pin for Drawing Elliptical Shape	10,000.00
4.	Draw Table Fixturing	7,500.00
5.	Draw 95 - 10 ft. Lengths	16,568.00
6.	Leak Check Drawn Tubing	4,142.00
7.	Bend 95 - 10 ft. Lengths	33,483.00
8.	Leak Check Curved Lengths	4,185.00
9.	Cut 388 Port Holes	33,834.00
10.	Prepare Port Tubing and Flanges for Welding	50,750.00
11.	Weld Flanges to Tubing	33,834.00
12.	Weld Ports to Chamber	42,292.00
13.	Weld 4 1/2" Flanges to Chamber Ends	9,156.00
14.	Leak Check Chambers	7,968.00
15.	Chemical Clean and Bake	26,560.00
16.	Prepare for Storage	6,640.00
17.	Riggers	3,650.00
18.	Install	26,560.00
19.	Install Baking Capability	53,063.00
		$384,979.00
	ED&I - 15%	57,747.00
		$442,726.00

Table III

Cost Estimate for AL-Vacuum Chamber per Fig. 2
for the Injector Synchrotron

The chamber will have 2-mm wall, 6-cm major dia., 3.5-cm minor dia.

1. Die	$ 5,000.00
2. Extrusions @ $2.50/lb	4,300.00
3. Bending	22,322.00
4. Flanges	
a. 6" O.D., 4" I.D. - 72 req. ea 4 hrs. @ 38.40/hr	11,059.00
b. 3-3/8" O.D., 2" I.D. - 50 req. ea 3 hrs @ 38.40/hr	5,760.00
c. 2-3/4" O.D., 1-1/2" I.D. - 60 req. ea 2 hrs @ 38.40/hr	4,608.00
d. 1-1/3" O.D., 3/4" I.D. - 300 req. ea 1 hr @ 38.40/hr	11,520.00
5. Leak check extrusions	4,142.00
6. Leak check extrusions after bending	4,142.00
7. Cut 388 Port Holes - 2 hrs @ 38.40/hr	29,798.00
8. Prepare port tubing and flanges for welding - 2 hrs @ 38.40/hr	29,798.00
9. Weld flanges to tubing 2 hr @ 43.60/hr	33,834.00
10. Leak check item 9. units before welding to chamber - leak check 4/hr @ 33.20/hr	3,220.00
11. Weld ports to chamber - 2.5 hr @ 43/60/hr	42,292.00
12. Weld 4" flanges to chamber ends - 3 hr at 43.60/hr	9,417.00
13. Leak check chambers	7.968.00
14. Chemical clean and bake	26,560.00
15. Prepare for storage	6,640.00
16. Riggers	3,650.00
17. Installation	26,560.00
18. Install baking capability	53,063.00
	345,653.00
ED&I - 15%	51,848.00
	$397,501.00

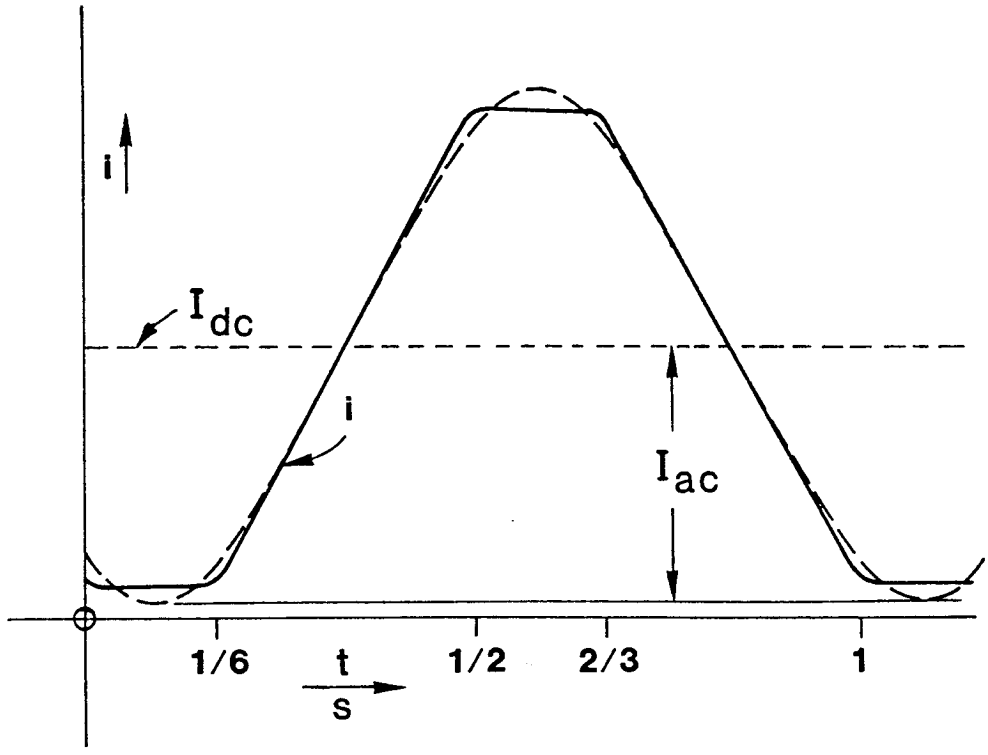

Fig. 1. Ring magnet current and current approximation.

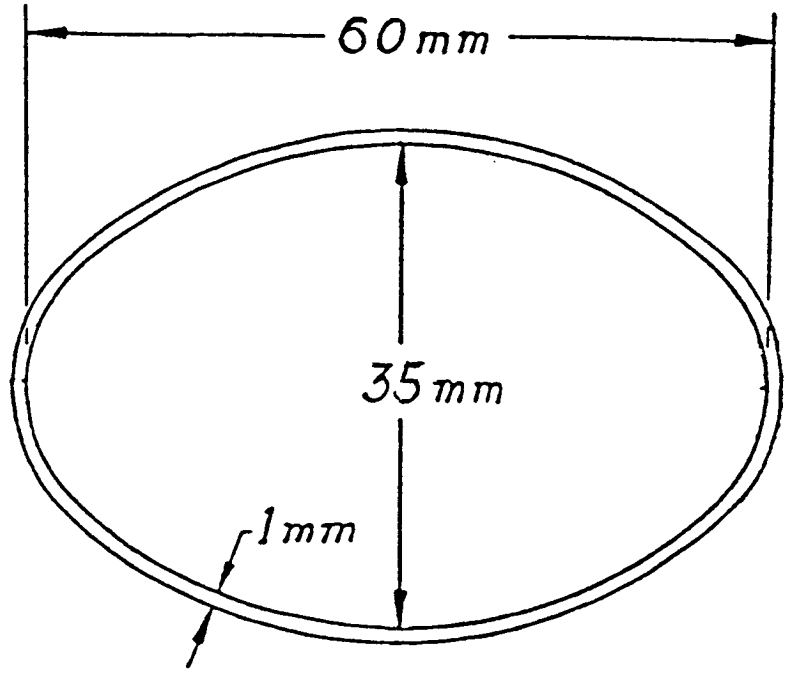

Fig. 2. Cross section of proposed unreinforced SS-vacuum chamber.

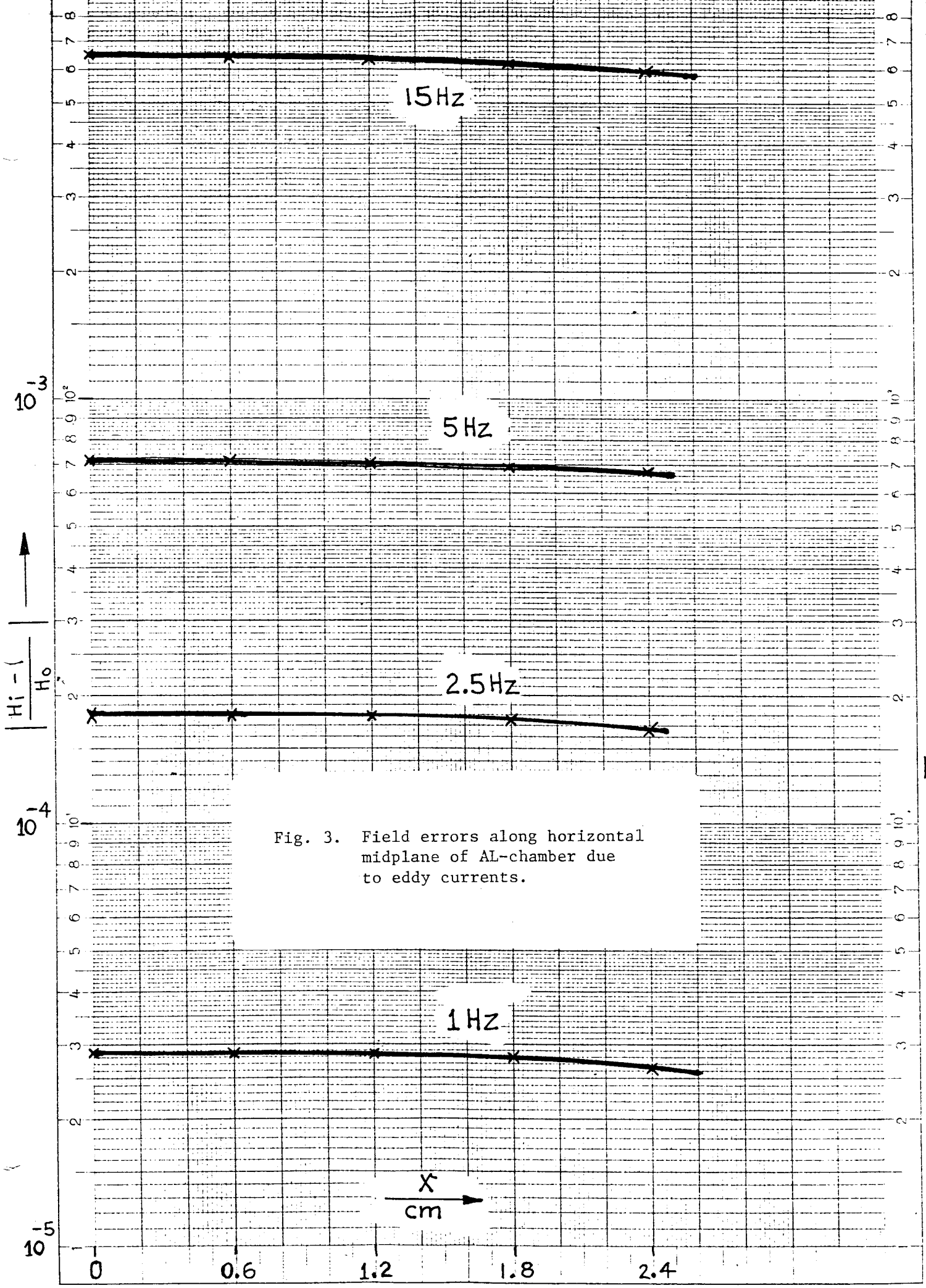

Fig. 3. Field errors along horizontal midplane of AL-chamber due to eddy currents.

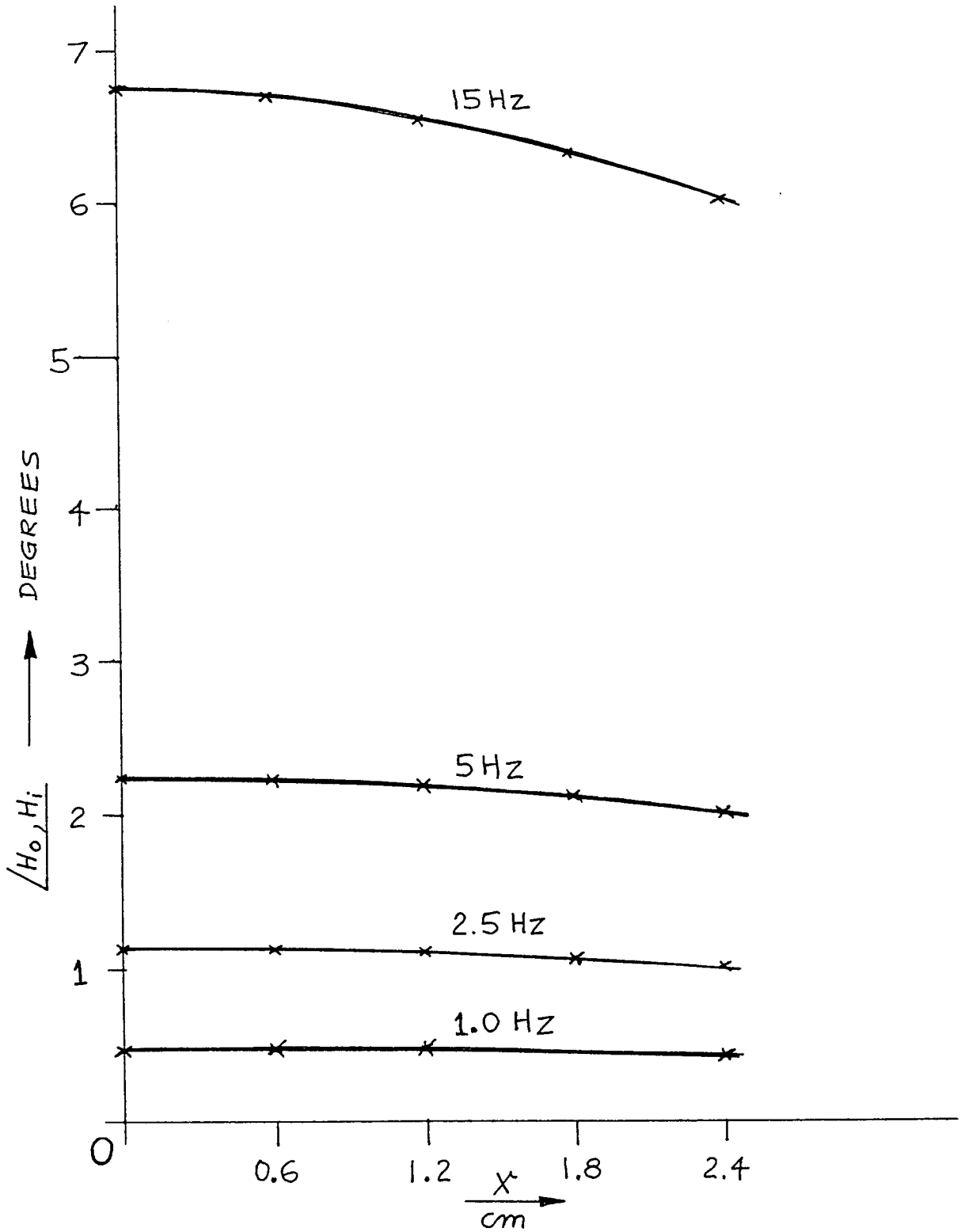

Fig. 4. Phase shift between fields outside, H_o, and inside, H_i, of AL-vacuum chamber along horizontal midplane.